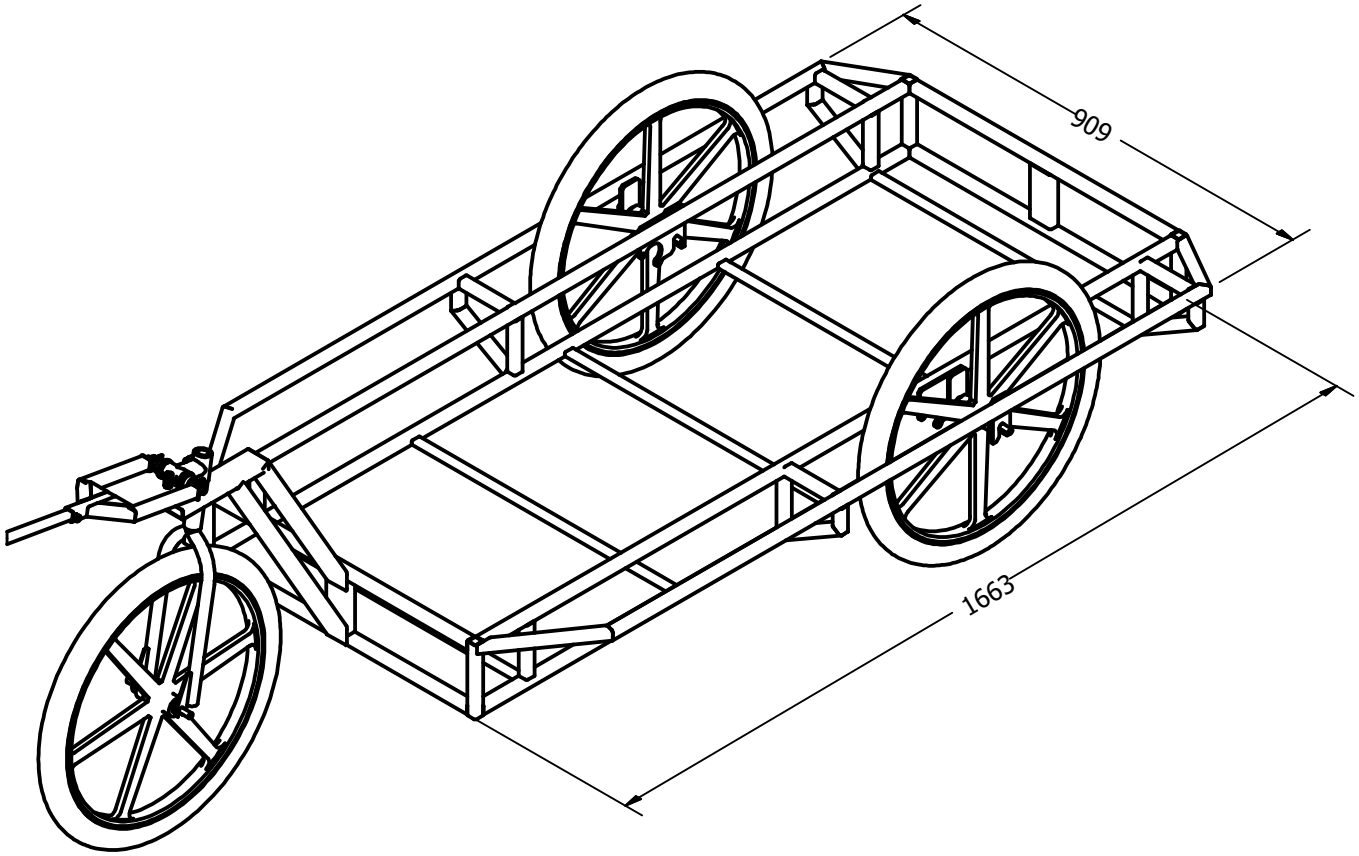

Proyect NOMBRE DE PROYECTO	Created by D. Mosquera	Approved by D. Jeager	
Part Name DESCRIPCION - PLANO CONJUNTO	Part Code A1	Document Type ASSEMBLY	Material Steel C45
Redesigned by / Original drawing from	License CC-BY-SA 4.0	File Name oseg_cbt_A1_crowd-bicycle-trailer	Version 1.0 / Quantity
		Scale 1:12	Sheet 1 / Date 04.12.20

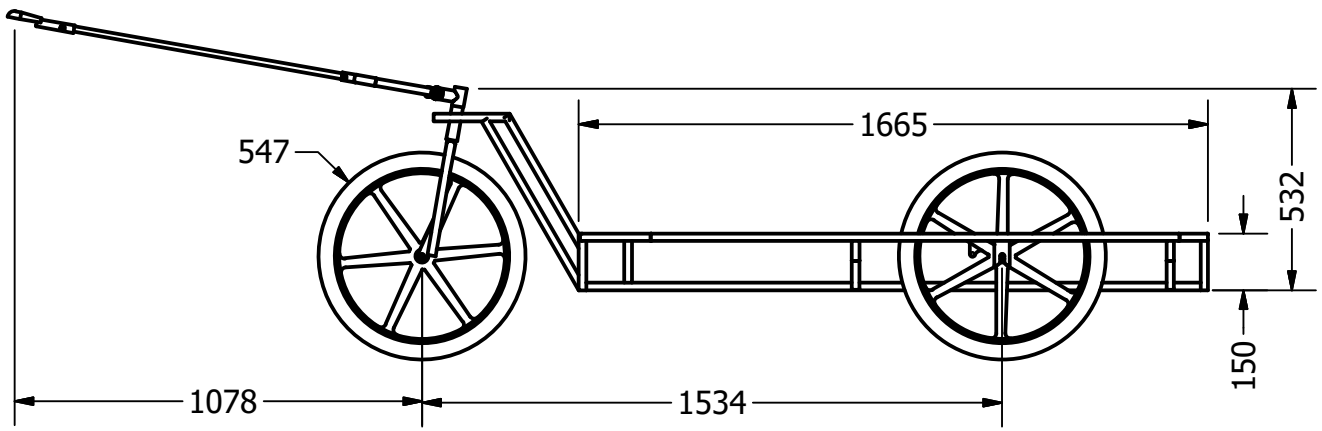

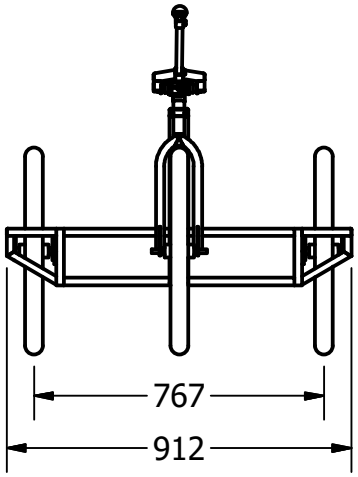

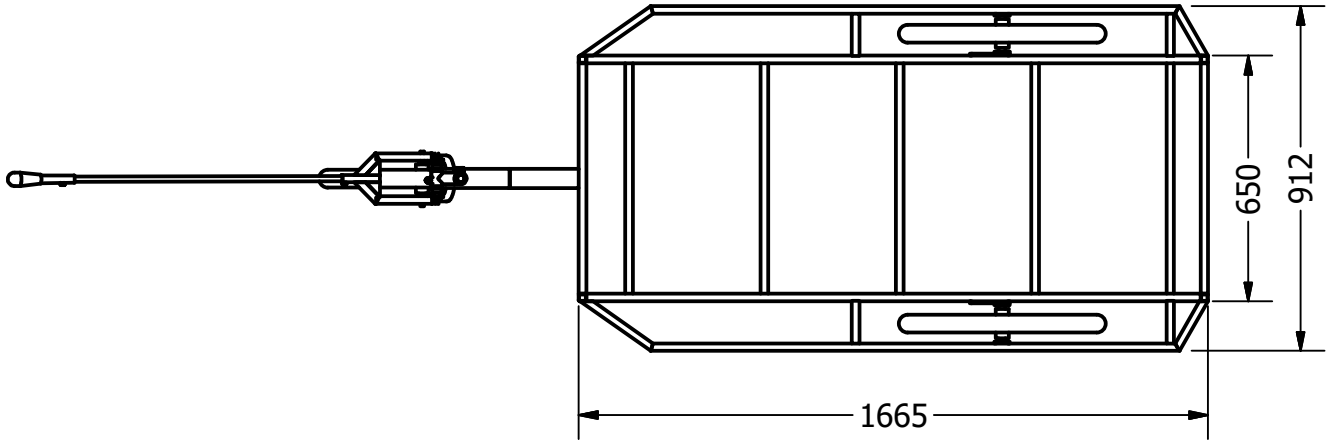

All permanent joints are welded

Proyect: Crowd bicycle trailer	Created by: D. Mosquera	Approved by: D. Jeager	
Part Name: Crowd-bicycle-trailer	Part Code: A1	Document Type: ASSEMBLY	Material: Steel C45
Redesigned by	Original drawing from	License: CC-BY-SA 4.0	File Name: oseq_cbt_A1_crowd-bicycle-trailer
Version: 1.0	Quantity	Scale: 1:12	Sheet: 1
Date: 04.12.20			

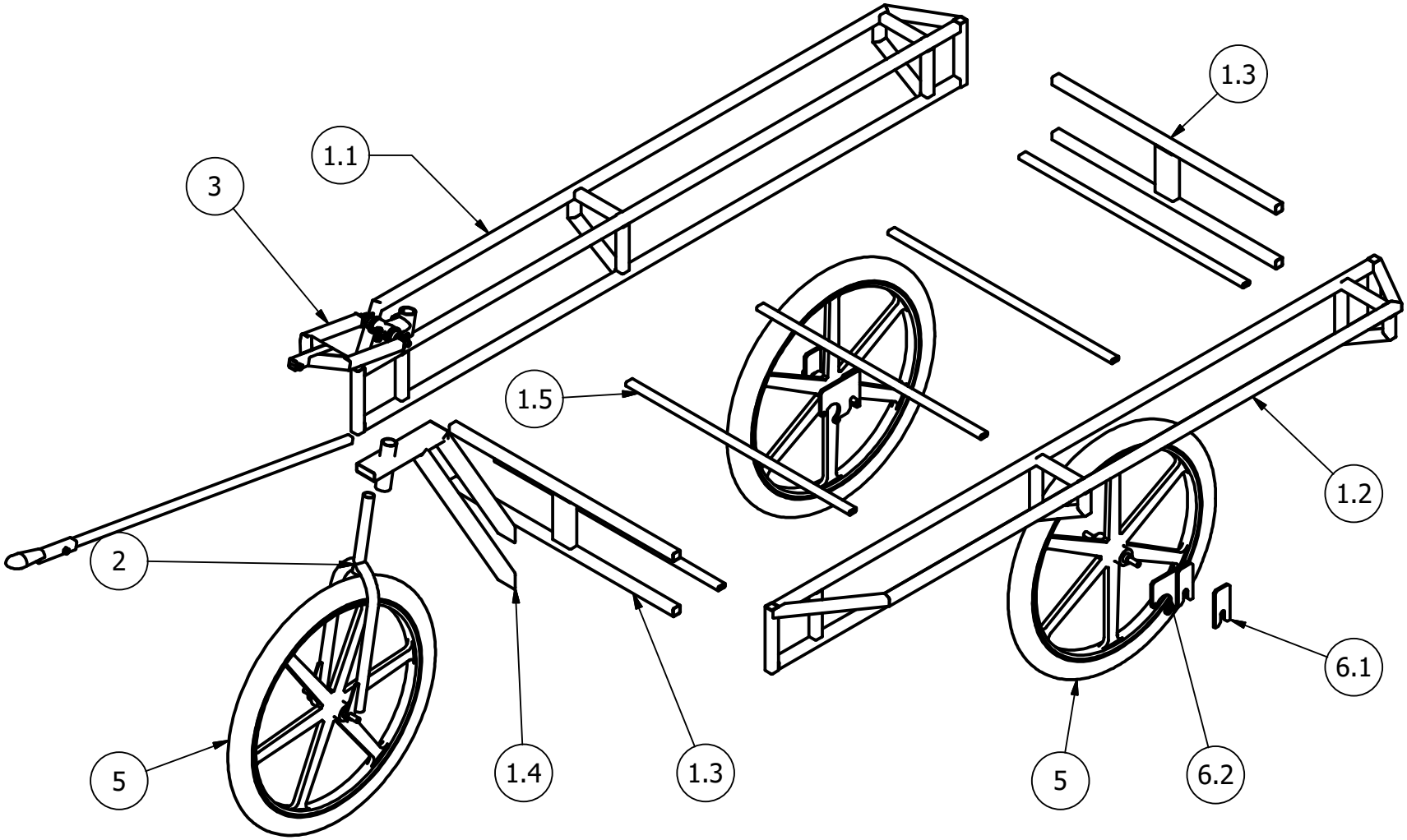

Proyect Crowd bicycle trailer	Created by D. Mosquera	Approved by D. Jeager	
Part Name Crowd-bicycle-trailer	Part Code A2	Document Type ASSEMBLY	Material Steel C45
Redesigned by	Original drawing from	License CC-BY-SA 4.0	File Name oseg_cbt_A2_crowd-bicycle-trailer.ipn
		Scale 1:12	Sheet 3
Version 1.0	Quantity	Date 04.12.20	

Pos.	Pos. old	Qty.	Part name	File name (new)	Part type	Specifications	Sheet
A1			crowd bicycle trailer	oseg_cbt_A1_crowd-bicycle-trailer.iam	production		1
A2			Cap machine presentation	oseg_cbt_A2_crowd-bicycle-trailer.ipn	production		3
B			Cap machine parts-list	oseg_cbt_B_parts-list.xls			4-5
1			frame	oseg_cbt_frame.iam	production		6
1.1			left side frame	oseg_cbt_left side frame.iam	production		8
1.1.1	1	2	Steel pipe 20x20x1620	oseg_cbt_steel pipe 20x20x1620.ipt	production	Steel A36	12
1.1.2	2	2	Steel pipe 20x20x150	oseg_cbt_steel pipe 20x20x150.ipt	production	Steel A36	13
1.1.3	3	5	Steel pipe 20x20x110	oseg_cbt_steel pipe 20x20x110.ipt	production	Steel A36	14
1.1.4	5	1	Steel pipe 20x20x1400	oseg_cbt_steel pipe 20x20x1400.ipt	production	Steel A36	15
1.1.5	6	2	Steel pipe 20x20x230	oseg_cbt_steel pipe 20x20x230.ipt	production	Steel A36	16
1.1.6	9	2	Steel pipe 20x20x53	oseg_cbt_steel pipe 20x20x53.ipt	production	Steel A36	17
1.1.7	4	2	Steel pipe 20x20x152	oseg_cbt_steel pipe 20x20x152.ipt	production	Steel A36	18
1.1.8		1	brake bracket	oseg_cbt_brake bracket.ipt	production	Steel C45	19
1.1.9		2	Brake axis	oseg_cbt_Brake-axis.ipt	production	Steel C45	20
1.2			right side frame	oseg_cbt_right side frame.iam	production		9
1.2.1	1	2	Steel pipe 20x20x1620	oseg_cbt_steel pipe 20x20x1620.ipt	production	Steel A36	12
1.2.2	2	2	Steel pipe 20x20x150	oseg_cbt_steel pipe 20x20x150.ipt	production	Steel A36	13
1.2.3	3	5	Steel pipe 20x20x110	oseg_cbt_steel pipe 20x20x110.ipt	production	Steel A36	14
1.2.4	5	1	Steel pipe 20x20x1400	oseg_cbt_steel pipe 20x20x1400.ipt	production	Steel A36	15
1.2.5	6	2	Steel pipe 20x20x230	oseg_cbt_steel pipe 20x20x230.ipt	production	Steel A36	16
1.2.6	9	2	Steel pipe 20x20x53	oseg_cbt_steel pipe 20x20x53.ipt	production	Steel A36	17
1.2.7	4	2	Steel pipe 20x20x152	oseg_cbt_steel pipe 20x20x152.ipt	production	Steel A36	18
1.2.8		1	brake bracket	oseg_cbt_brake bracket.ipt	production	Steel C45	19
1.2.9		2	Brake axis	oseg_cbt_Brake-axis.ipt	production	Steel C45	20

Proyect: Crowd bicycle trailer	Created by: D. Mosquera	Approved by: D. Jeager			
Part Name: Crowd-bicycle-trailer	Part Code: A3	Document Type: Part list		Material: Steel C45	
Redesigned by	Original drawing from	License: CC-BY-SA 4.0	File Name: crowd-bicycle-trailer-parts-list 1.0.xs	Version: 1.0	Quantity
			Scale: S/E	Sheet: 4	Date: 04.12.20

TABLE

Pos.	Pos.	Qty.	Part name	File name (new)	Part type	Specifications	Sheet
1.3		2	frontal frame	oseg_cbt_frontal frame.iam	production		10
1.3.1	11	2	Steel pipe 20x20x610	oseg_cbt_steel pipe 20x20x610.ipt	production	Steel A36	21
1.3.2	12	1	Steel pipe 20x50x110	oseg_cbt_steel pipe 20x50x110.ipt	production	Steel A36	22
1.4			head tube	oseg_cbt_head tube.iam	production		11
1.4.1	16	1	Steel pipe 20x50x200	oseg_cbt_steel pipe 20x50x200.ipt	production	Steel A36	23
1.4.2	15	1	Steel pipe 20x50x400	oseg_cbt_steel pipe 20x50x400.ipt	production	Steel A36	24
1.4.3		1	Steel pipe 20x50x500	oseg_cbt_steel pipe 20x50x500.ipt	production	Steel A36	25
1.4.4		1	Bush	oseg_cbt_Bush.ipt	production	Steel A36	26
1.5		5	Steel pipe 20x10x610	oseg_cbt_steel-pipe 20x10x610.ipt	production	Steel A36	27
2		1	steering fork	oseg_cbt_steering fork.iam	Standart	steel pipe d: 22.0 - rings: 20-22	
3			support fork	oseg_cbt_support fork.iam	production		
3.1	3	1	Steel pipe 20x20x150	oseg_cbt_steel pipe 20x20x150.ipt	production	Steel A36	13
3.2	2	2	Steel pipe 20x20x100	oseg_cbt_steel pipe 20x20x100.ipt	production	Steel A36	29
3.3	1	2	Steel pipe 20x20x200	oseg_cbt_steel pipe 20x20x200.ipt	production	Steel A36	30
3.4		2	triangular flancher	oseg_cbt_triangular flancher.ipt	production	Steel C45	31
3.5		2	Brake axis rate	oseg_cbt_Brake-axi-rate.ipt	production	Steel C45	32
3.6	5,6	1	wheel rate	oseg_cbt_wheel rate.ipt	Standart	hub standart for bycicle	
3.7		1	handlebar-stem	oseg_cbt_handlebar-stem.ipt	Standart		
4			tow bar	oseg_cbt_tow bar.iam	production		33
4.1		2	Steel pipe 20x20x850	oseg_cbt_steel pipe 20x20x500.ipt	production	Steel A36	34
4.2		1	coupling	oseg_cbt_coupling.ipt	production	Steel C45	35
4.3		1	Steel pipe 20x20x200	oseg_cbt_steel pipe 20x50x200.ipt	production	Steel A36	
5		3	bike wheel	oseg_cbt_bike-wheel.ipt	Standart	model:20x2 125 with rubber, hub and axi	

Proyect: Crowd bicycle trailer	Created by: D. Mosquera	Approved by: D. Jeager		
Part Name: Crowd-bicycle-trailer	Part Code: A3	Document Type: Part list	Material: Steel C45	
Redesigned by	Original drawing from	License: CC-BY-SA 4.0	File Name: crowd-bicycle-trailer-parts-list 1.0.xls	Version: 1.0 / Quantity
			Scale: S/E	Sheet: 5 / Date: 04.12.20

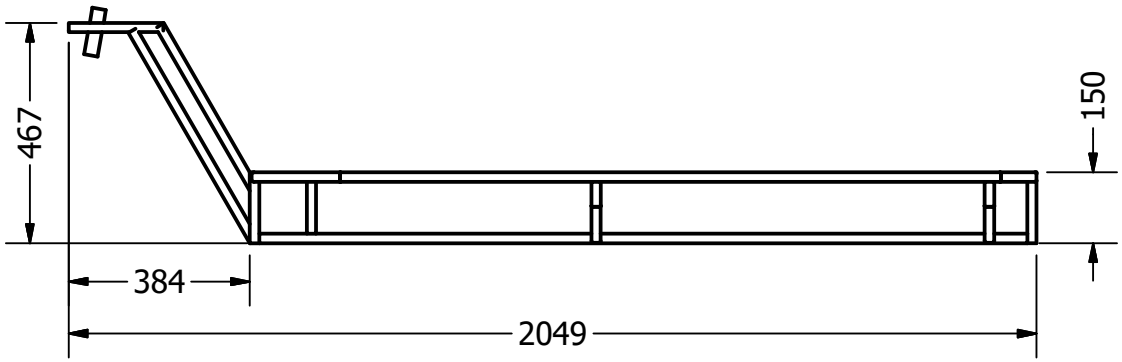

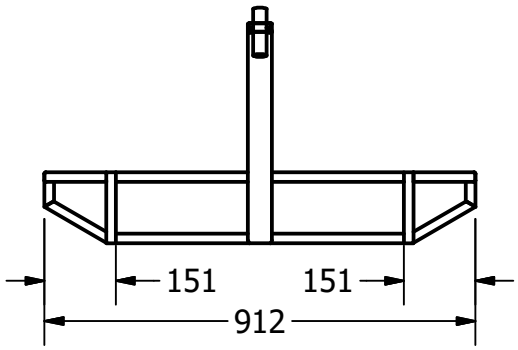

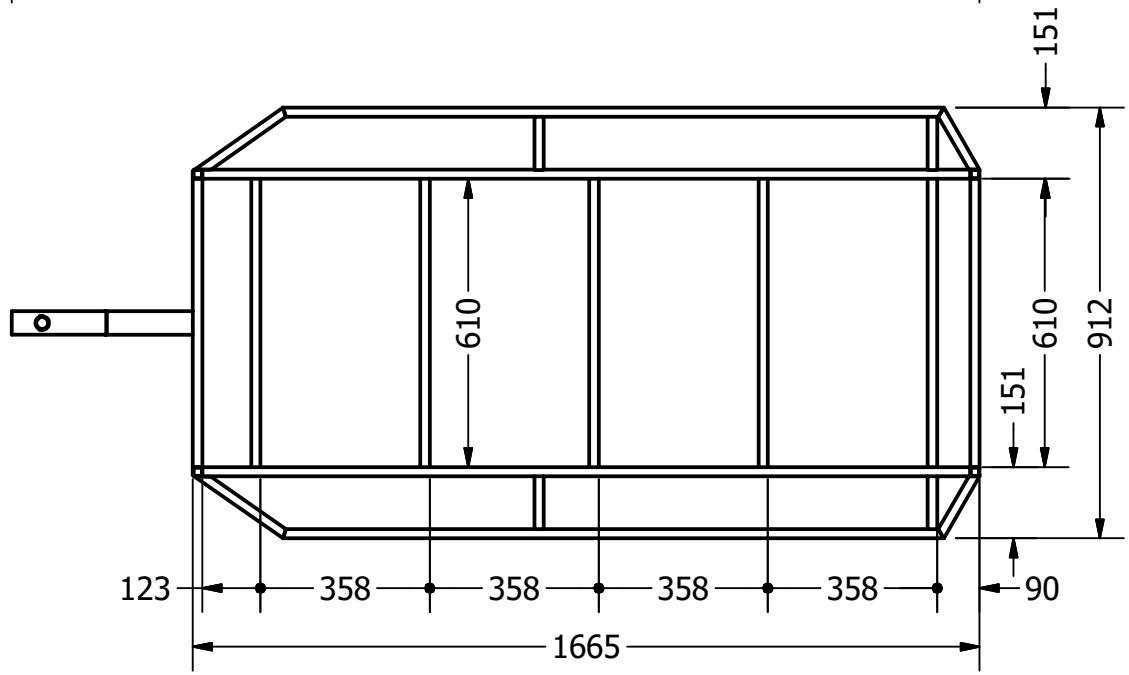

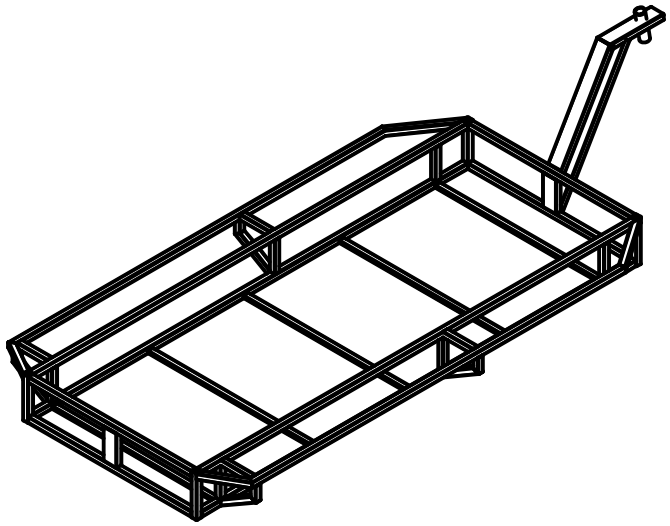

Proyect Crowd bicycle trailer		Created by D. Mosquera	Approved by D. Jeager		
Part Name Frame		Part Code 1	Document Type ASSEMBLY	Material	
Redesigned by	Original drawing from	License CC-BY-SA 4.0	File Name oseg_cbt_frame.iam	Version 1.0	Quantity 1
			Scale 1:12	Sheet 6	Date 04.12.20

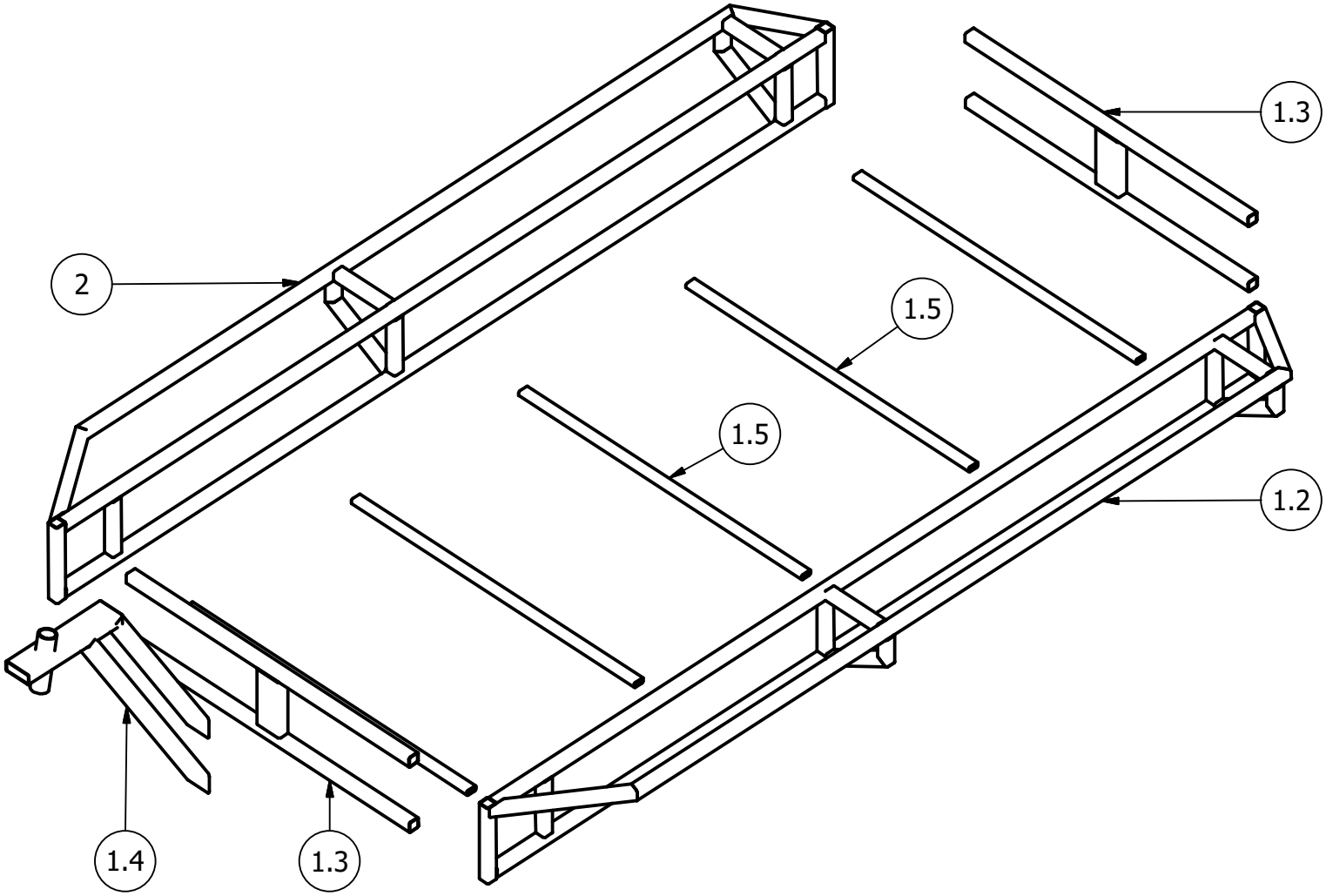

Proyect Crowd bicycle trailer		Created by D. Mosquera	Approved by D. Jeager		
Part Name Frame		Part Code 1	Document Type ASSEMBLY	Material Steel C45	
Redesigned by	Original drawing from	License CC-BY-SA 4.0	File Name oseg_cbt_frame.ipn	Version 1.0	Quantity 1
			Scale 1:12	Sheet 7	Date 04.12.20

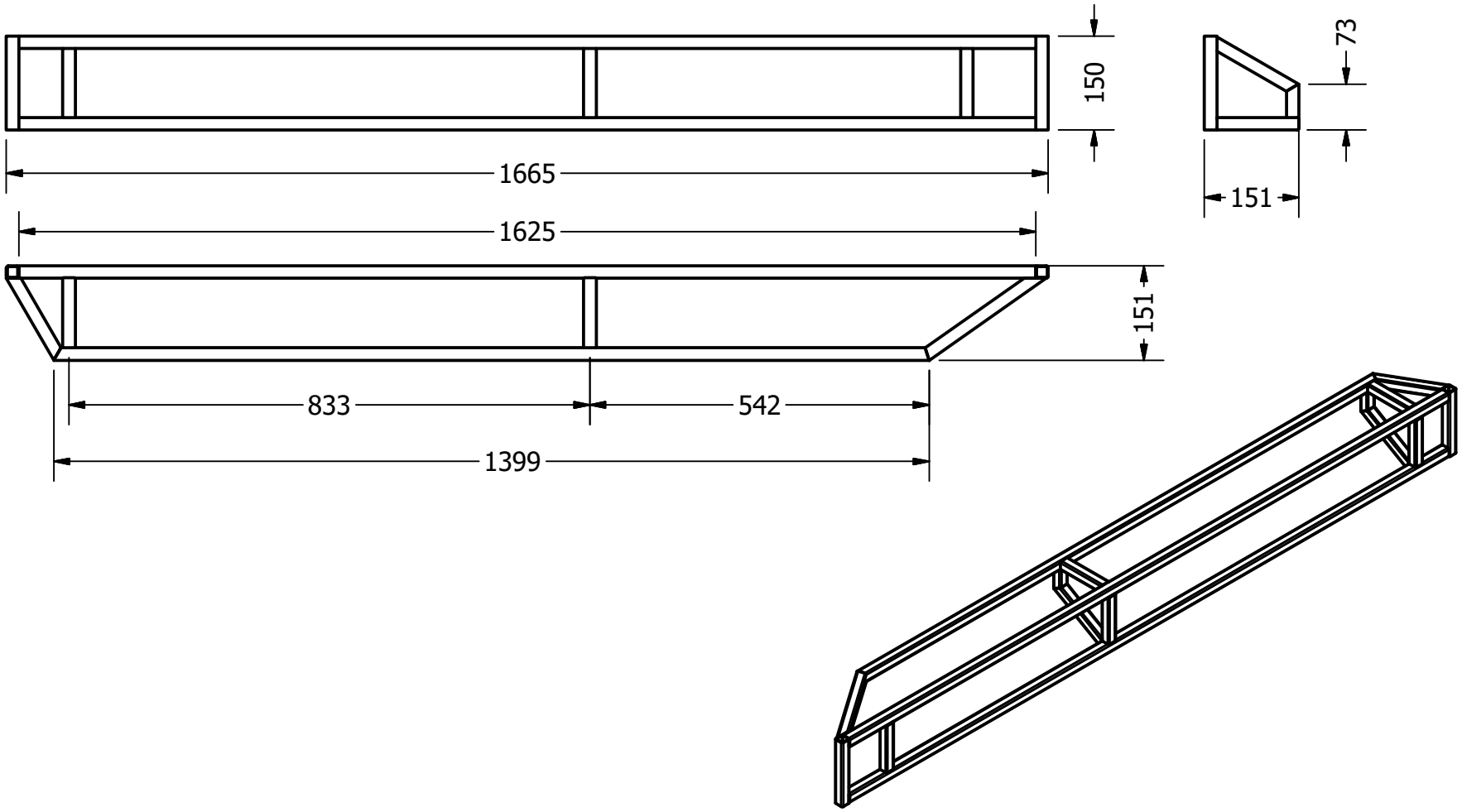

Proyect Crowd bicycle trailer		Created by D. Mosquera	Approved by D. Jeager		
Part Name Left-side-frame		Part Code 1.1	Document Type ASSEMBLY	Material	
Redesigned by	Original drawing from	License CC-BY-SA 4.0	File Name oseg_cbt_left-side-frame.iam	Version 1.0	Quantity 1
			Scale 1:10	Sheet 8	Date 04.12.20

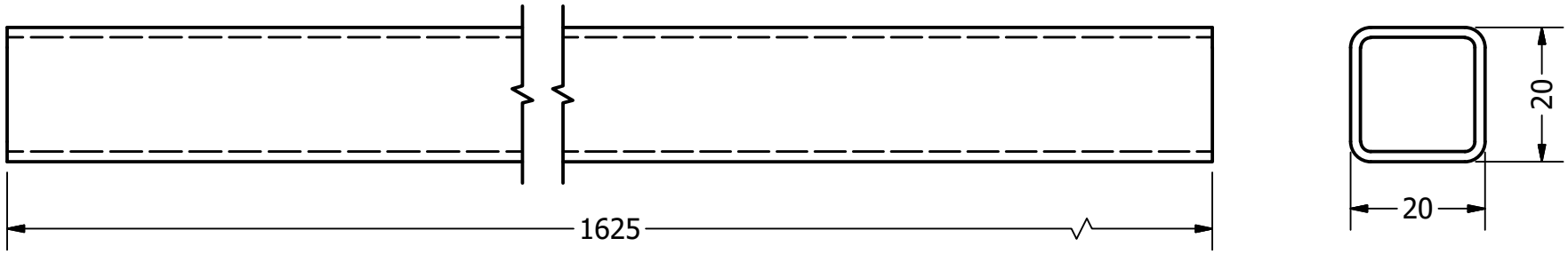

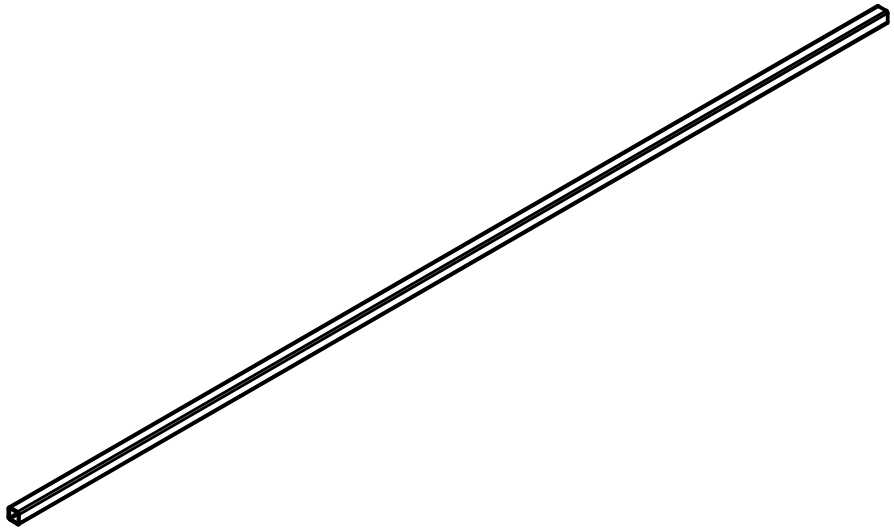

Proyect Crowd bicycle trailer		Created by D. Mosquera	Approved by D. Jeager		
Part Name steel-pipe 20x20x1620		Part Code 1.1.1 - 1.2.1	Document Type Part	Material Steel A36	
Redesigned by	Original drawing from	License CC-BY-SA 4.0	File Name oseg_cbt_steel-pipe 20x20x1.62.ipt	Version 1.0	Quantity 4
			Scale 1:1	Sheet 12	Date 04.12.20

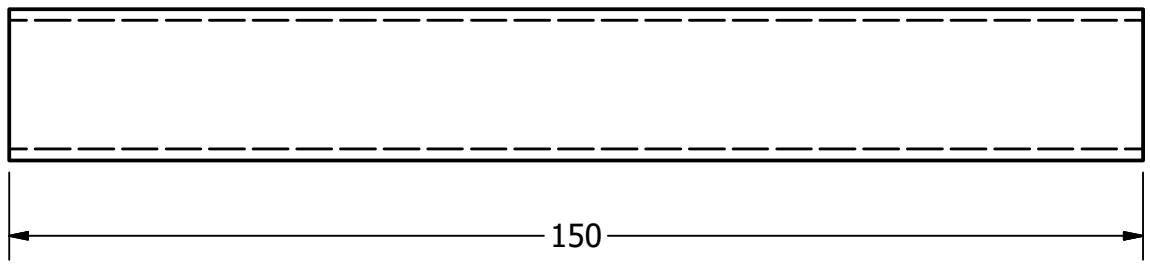

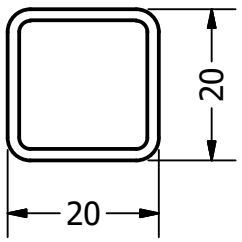

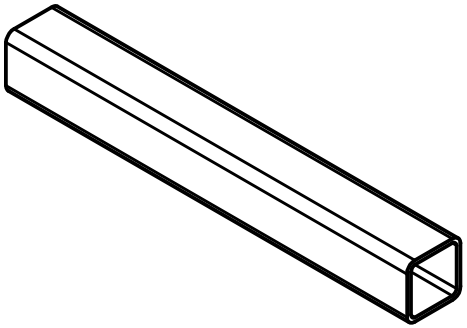

Proyect Crowd bicycle trailer		Created by D. Mosquera	Approved by D. Jeager		
Part Name steel-pipe 20x20x150		Part Code 1.1.2 - 1.2.2	Document Type Part	Material Steel A36	
Redesigned by	Original drawing from	License CC-BY-SA 4.0	File Name oseg_cbt_steel-pipe 20x20x0.15.ipt	Version 1.0	Quantity 4
			Scale 1:1	Sheet 13	Date 04.12.20

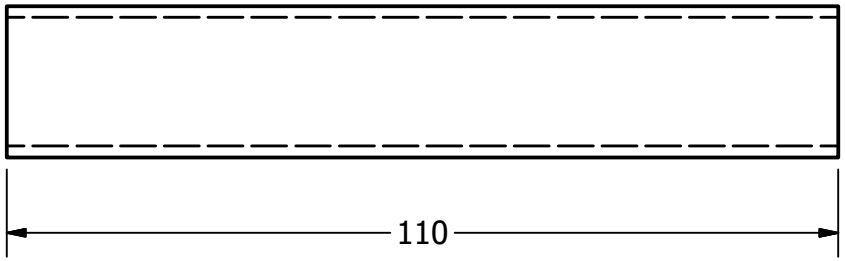

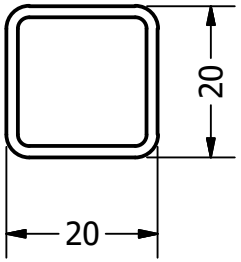

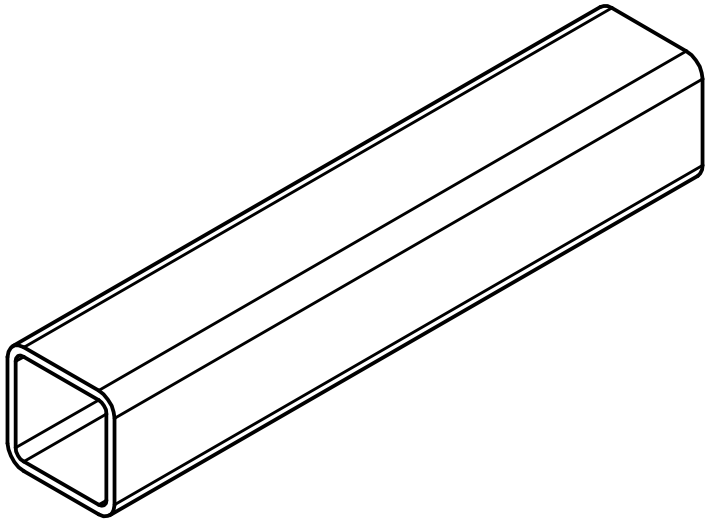

Proyect Crowd bicycle trailer		Created by D. Mosquera	Approved by D. Jeager		
Part Name steel-pipe 20x20x110		Part Code 1.1.3 - 1.2.3	Document Type Part	Material Steel A36	
Redesigned by	Original drawing from	License CC-BY-SA 4.0	File Name oseg_cbt_steel-pipe 20x20x0.11.ipt	Version 1.0	Quantity 10
			Scale 1:1	Sheet 14	Date 04.12.20

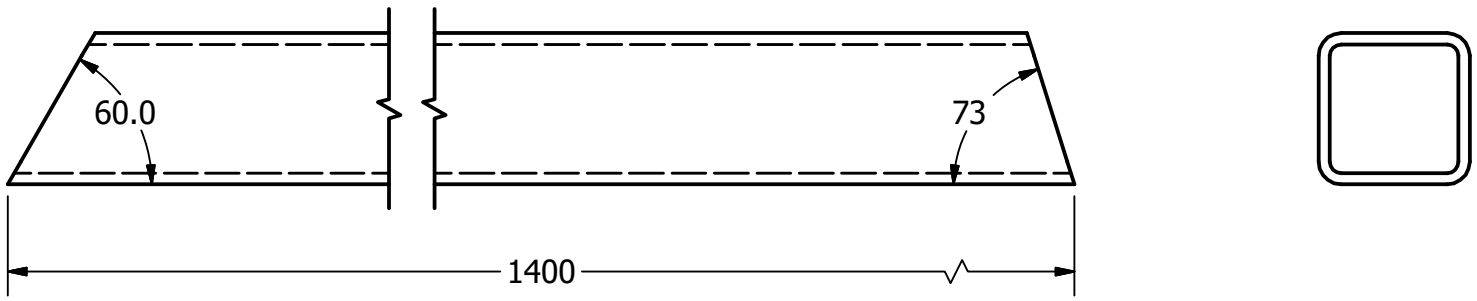

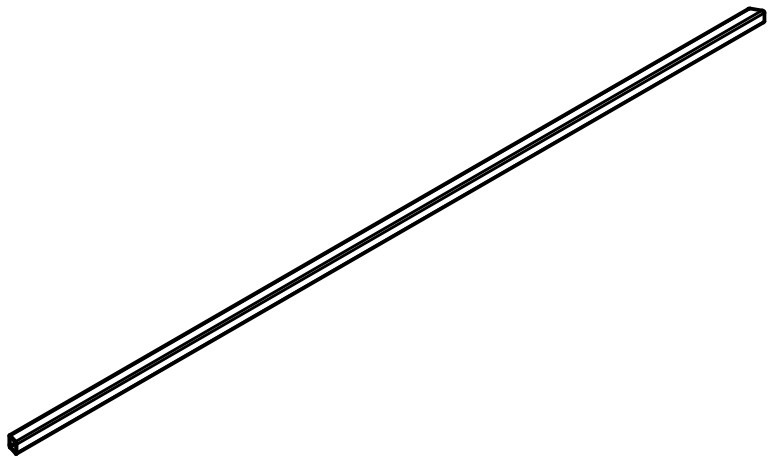

Proyect Crowd bicycle trailer		Created by D. Mosquera	Approved by D. Jeager		
Part Name steel-pipe 20x20x1400		Part Code 1.1.4 - 1.2.4	Document Type Part	Material Steel A36	
Redesigned by	Original drawing from	License CC-BY-SA 4.0	File Name oseg_cbt_steel-pipe 20x20x1400.ipt	Version 1.0	Quantity 2
			Scale 1:1	Sheet 15	Date 04.12.20

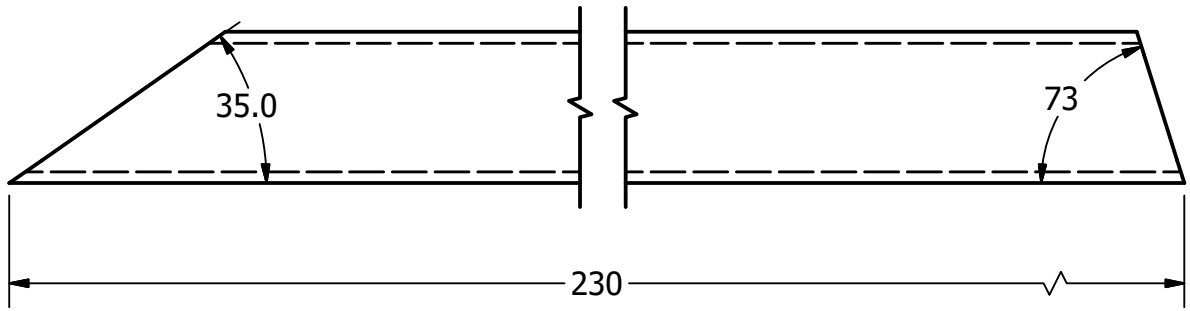

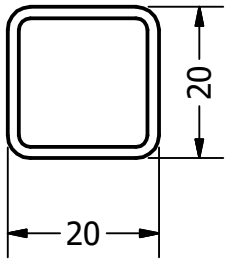

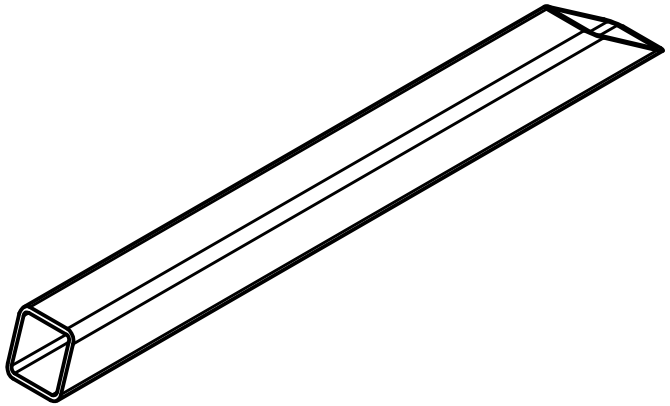

Proyect Crowd bicycle trailer		Created by D. Mosquera	Approved by D. Jeager		
Part Name steel-pipe 20x20x230		Part Code 1.1.5 - 1.2.5	Document Type Part	Material Steel A36	
Redesigned by	Original drawing from	License CC-BY-SA 4.0	File Name oseg_cbt_steel-pipe 20x20x230.ipt	Version 1.0	Quantity 4
			Scale 1:1	Sheet 16	Date 04.12.20

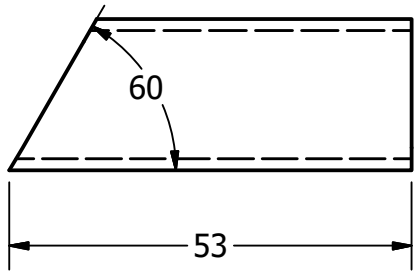

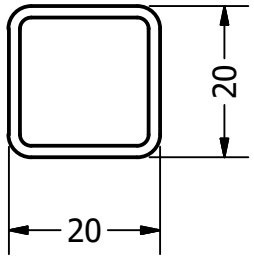

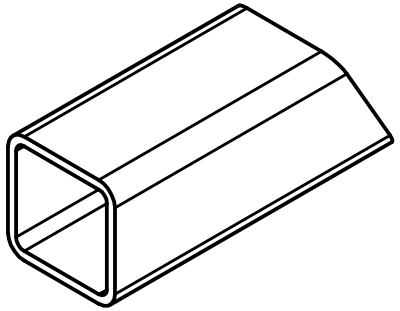

Proyect Crowd bicycle trailer		Created by D. Mosquera	Approved by D. Jeager		
Part Name steel-pipe 20x20x53		Part Code 1.1.6 - 1.2.6	Document Type Part	Material Steel A36	
Redesigned by	Original drawing from	License CC-BY-SA 4.0	File Name oseg_cbt_steel-pipe 20x20x53.ipt	Version 1.0	Quantity 4
			Scale 1:1	Sheet 17	Date 04.12.20

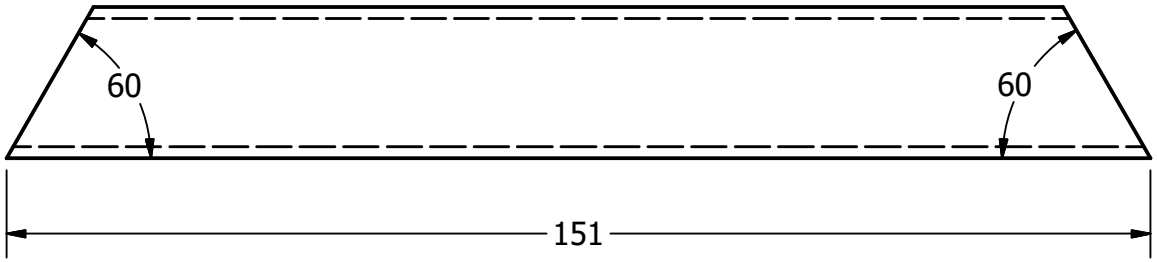

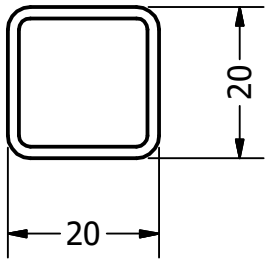

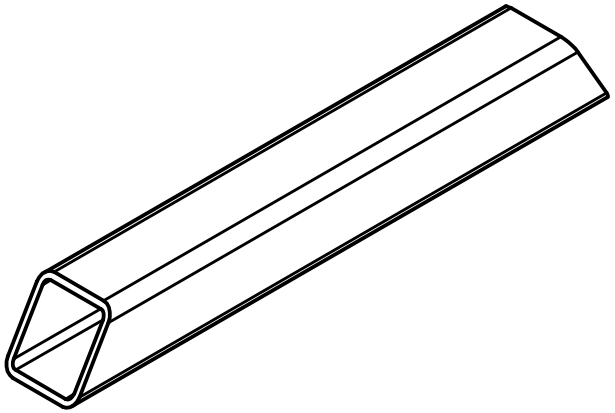

Proyect Crowd bicycle trailer		Created by D. Mosquera	Approved by D. Jeager		
Part Name steel-pipe 20x20x152		Part Code 1.1.7 - 1.2.7	Document Type Part	Material Steel A36	
Redesigned by	Original drawing from	License CC-BY-SA 4.0	File Name oseg_cbt_steel-pipe 20x20x152.ipt	Version 1.0	Quantity 4
			Scale 1:1	Sheet 18	Date 04.12.20

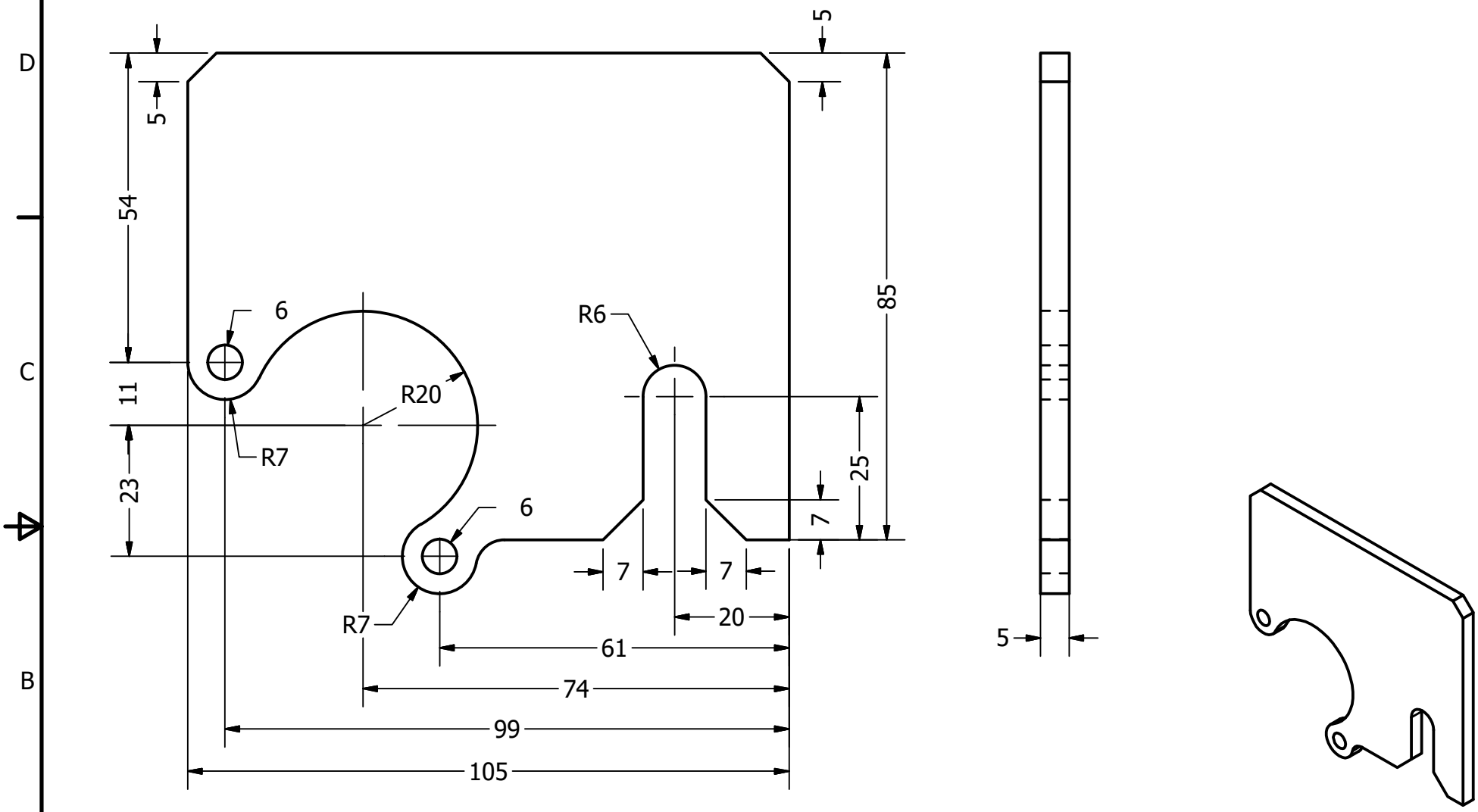

Proyect Crowd bicycle trailer		Created by D. Mosquera	Approved by D. Jeager		
Part Name Brake-break		Part Code 1.2.8	Document Type Part	Material Steel C45	
Redesigned by	Original drawing from	License CC-BY-SA 4.0	File Name oseg_cbt_Brake-break.ipt	Version 1.0	Quantity 2
			Scale 1:1	Sheet 19	Date 04.12.20

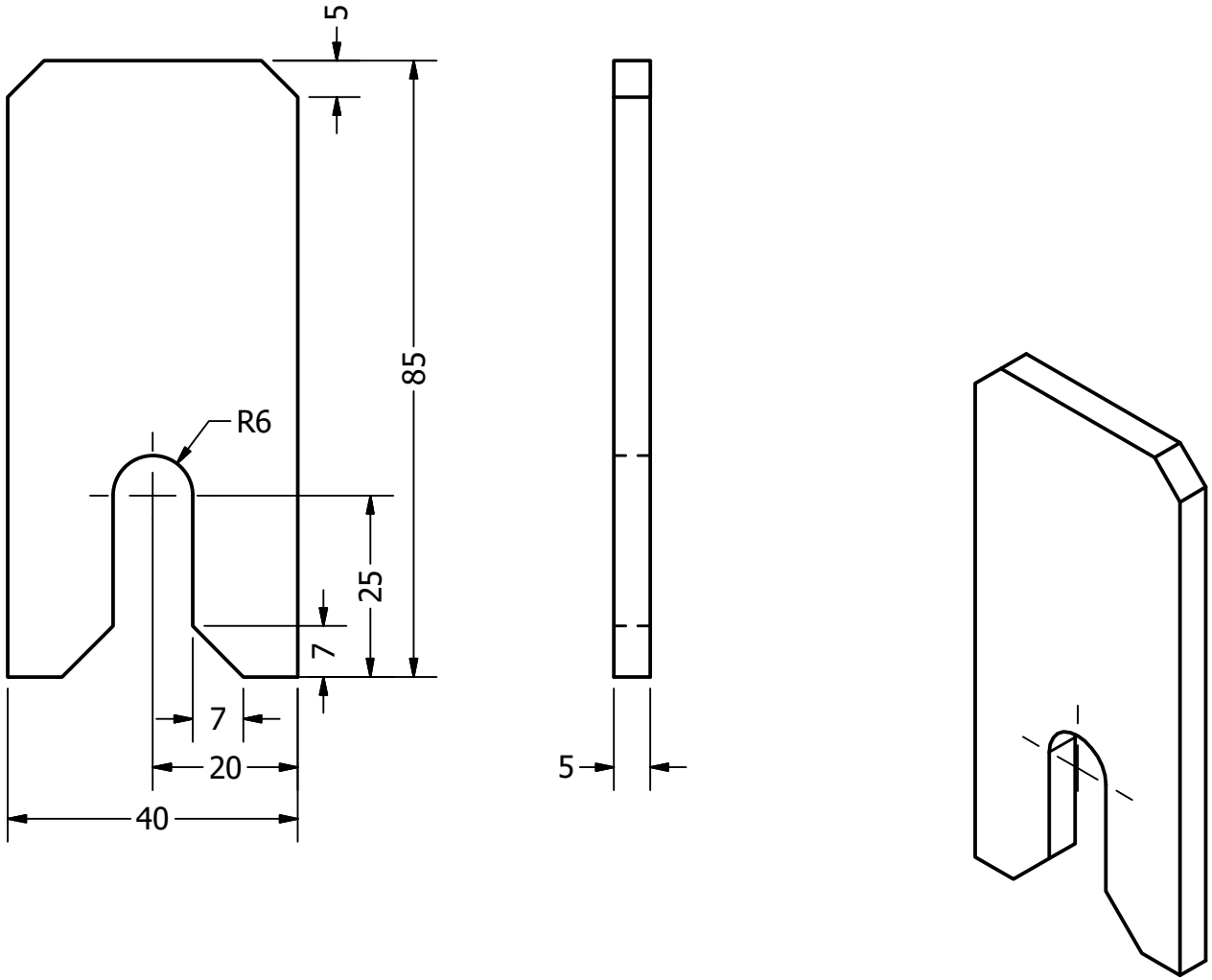

Proyect: Crowd bicycle trailer	Created by: D. Mosquera	Approved by: D. Jeager	
Part Name: Brake-axis	Part Code: 1.2.9	Document Type: Part	Material: Steel C45
Redesigned by	Original drawing from	License: CC-BY-SA 4.0	File Name: oseg_cbt_Brake-axis.ipt; Version: 1.0; Quantity: 4
			Scale: 1:1; Sheet: 20; Date: 04.12.20

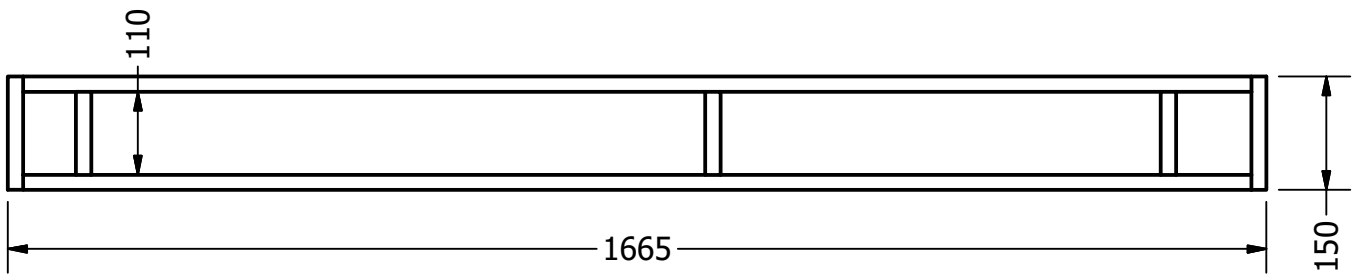

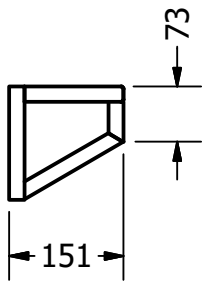

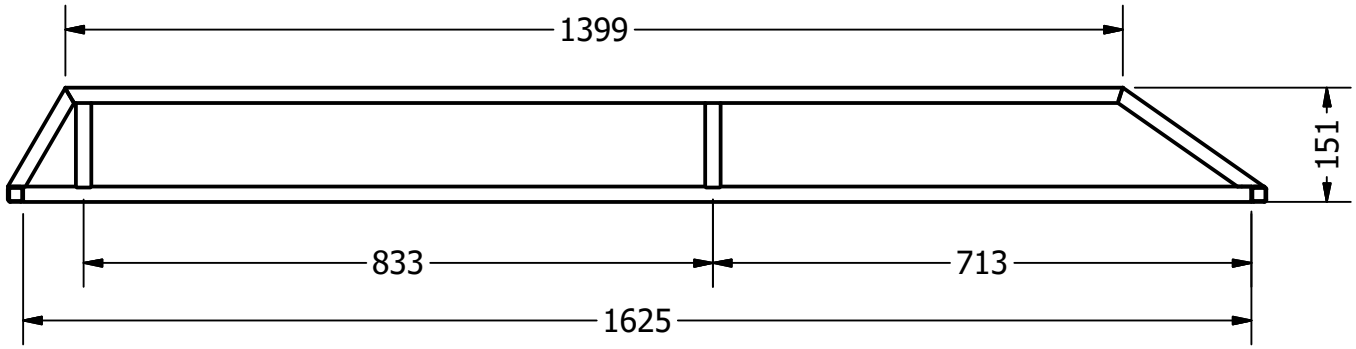

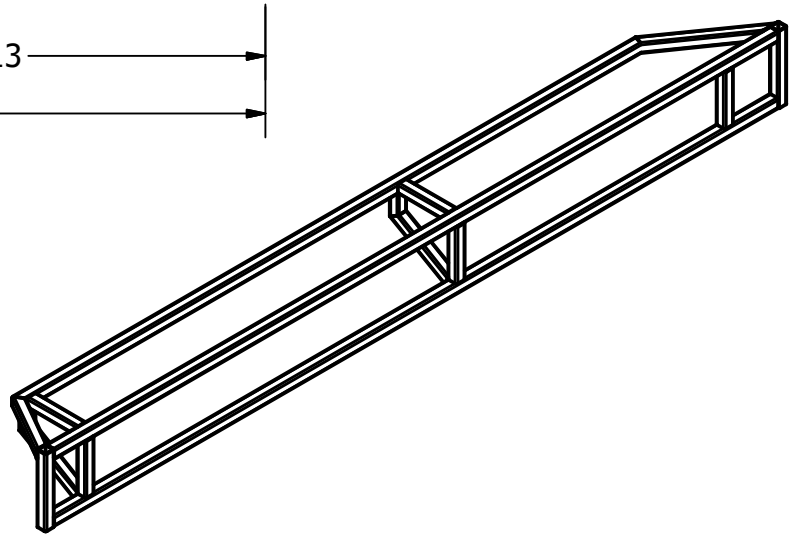

Proyect Crowd bicycle trailer		Created by D. Mosquera	Approved by D. Jeager		
Part Name Rigth-side-frame		Part Code 1.2	Document Type ASSEMBLY	Material	
Redesigned by	Original drawing from	License CC-BY-SA 4.0	File Name oseg_cbt_rigth-side-frame.iam	Version 1.0	Quantity 1
			Scale 1:10	Sheet 9	Date 04.12.20

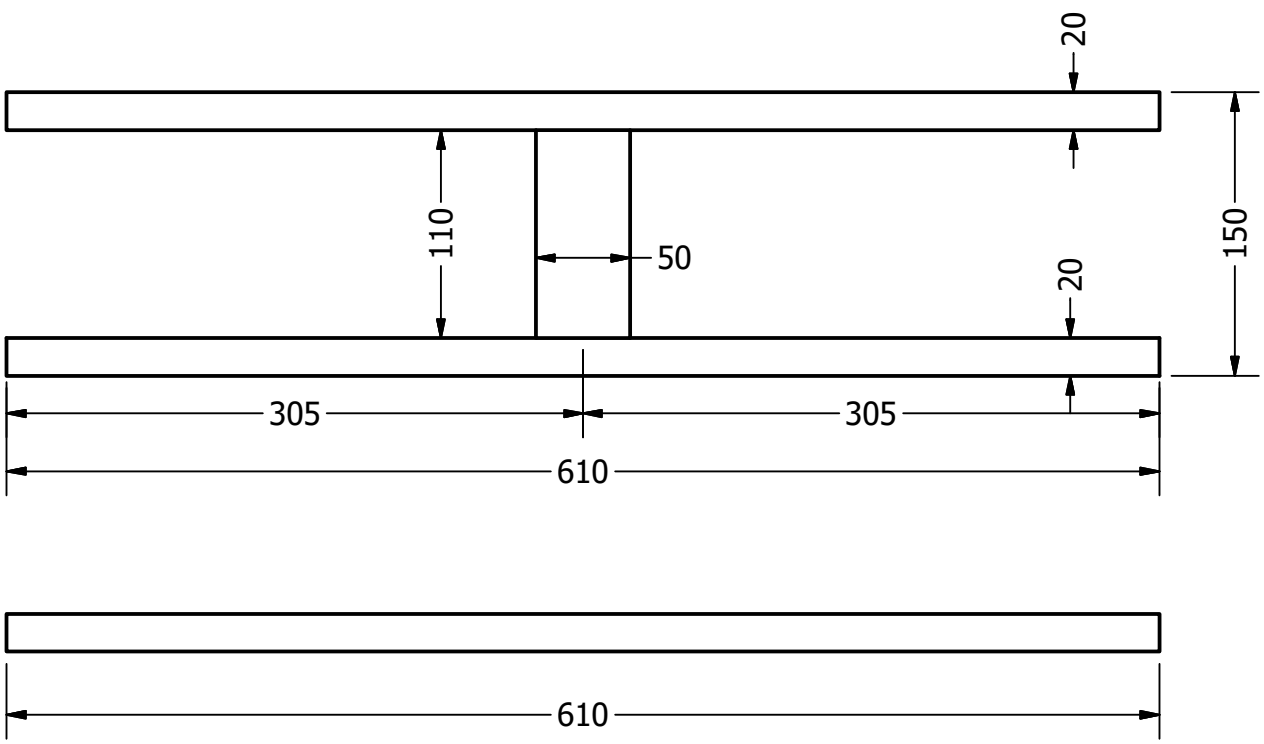

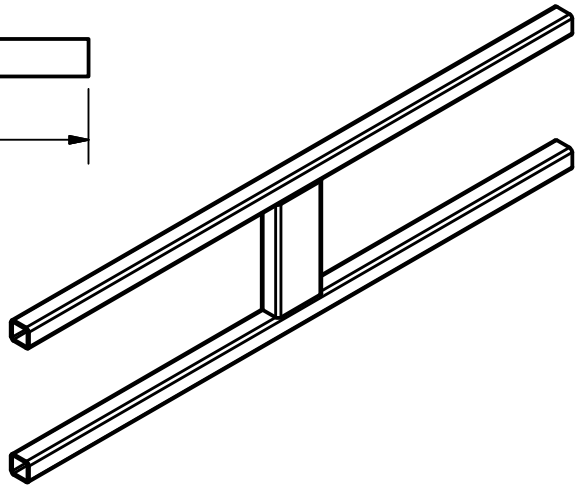

Proyect Crowd bicycle trailer		Created by D. Mosquera	Approved by D. Jeager		
Part Name frontal-frame		Part Code 1.3	Document Type ASSEMBLY	Material	
Redesigned by	Original drawing from	License CC-BY-SA 4.0	File Name oseg_cbt_frontal-frame.iam	Version 1.0	Quantity 1
			Scale 1:4	Sheet 11	Date 04.12.20

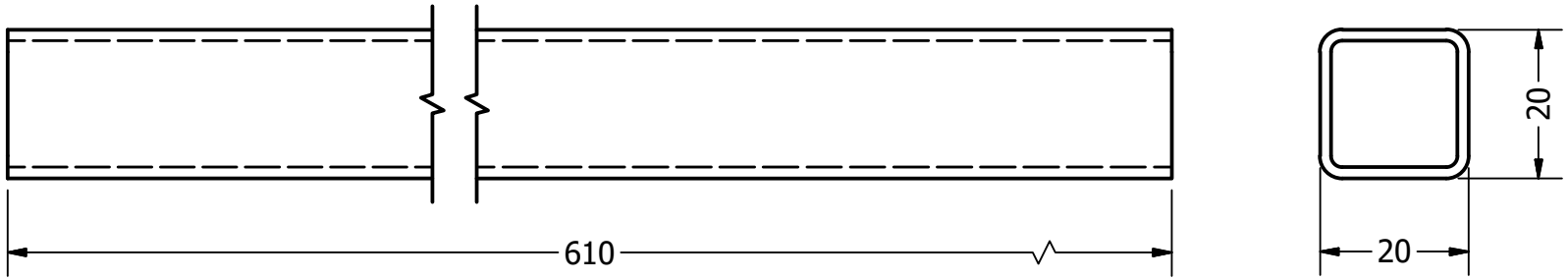

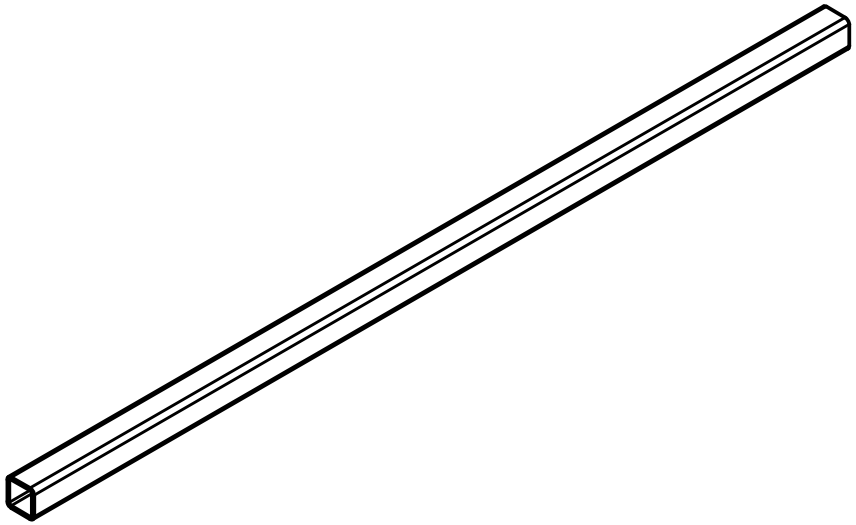

Proyect Crowd bicycle trailer		Created by D. Mosquera	Approved by D. Jeager		
Part Name steel-pipe 20x20x610		Part Code 1.3.1	Document Type Part	Material Steel A36	
Redesigned by	Original drawing from	License CC-BY-SA 4.0	File Name oseg_cbt_steel-pipe 20x20x0.61.ipt	Version 1.0	Quantity 1
			Scale 1:1	Sheet 21	Date 04.12.20

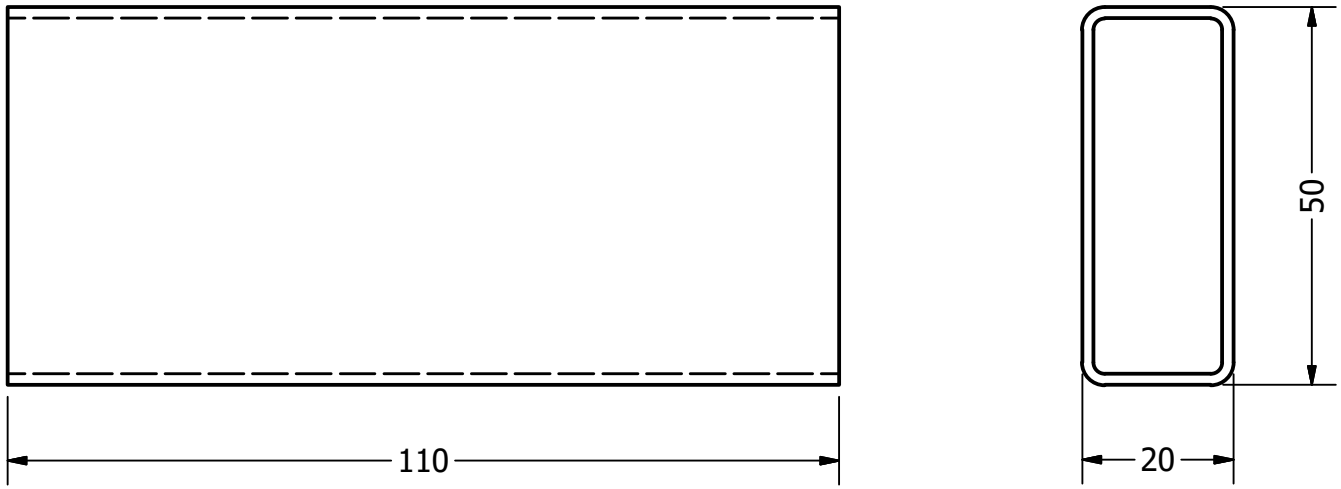

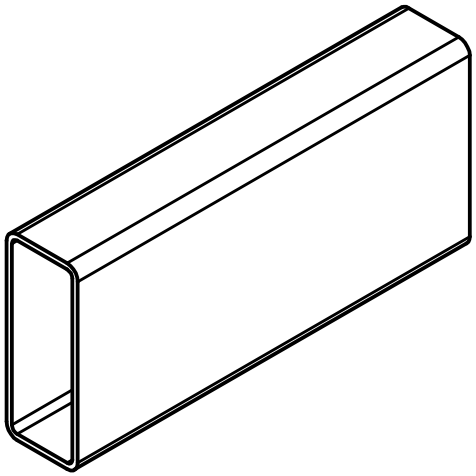

Proyect Crowd bicycle trailer		Created by D. Mosquera	Approved by D. Jeager		
Part Name steel-pipe 20x50x110		Part Code 1.3.2	Document Type Part	Material Steel A36	
Redesigned by	Original drawing from	License CC-BY-SA 4.0	File Name oseg_cbt_steel-pipe 20x50x110.ipt	Version 1.0	Quantity 1
			Scale 1:1	Sheet 22	Date 04.12.20

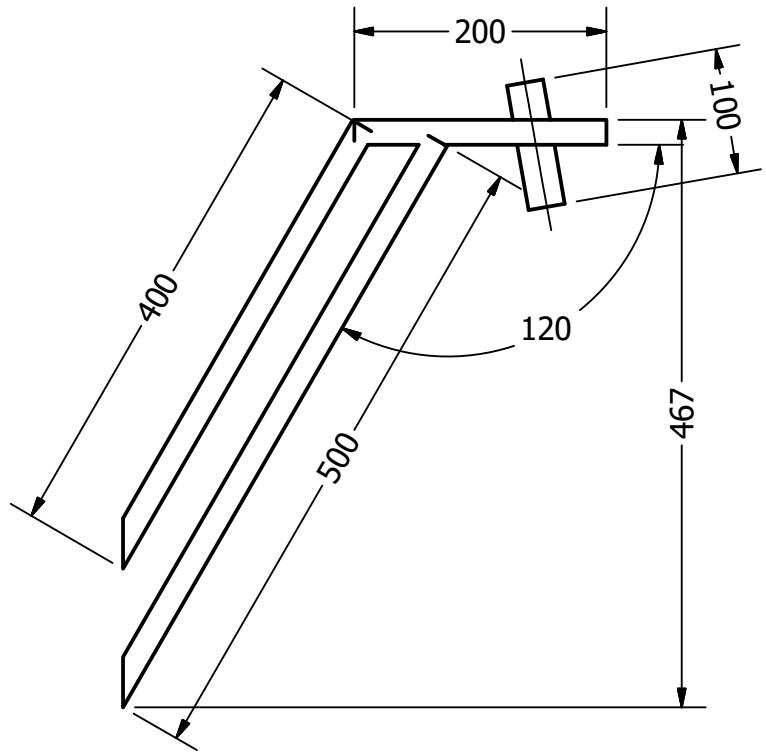

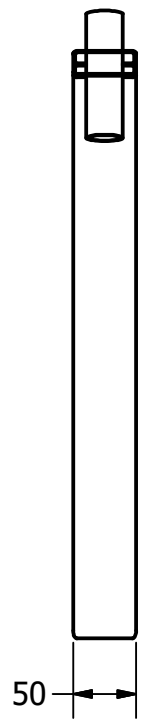

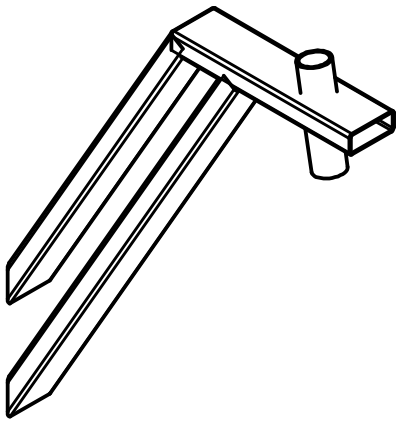

Proyect Crowd bicycle trailer		Created by D. Mosquera	Approved by D. Jeager		
Part Name Head-tube		Part Code 1.4	Document Type ASSEMBLY	Material	
Redesigned by	Original drawing from	License CC-BY-SA 4.0	File Name oseg_cbt_head-tube.iam	Version 1.0	Quantity 1
			Scale 1:6	Sheet 10	Date 04.12.20

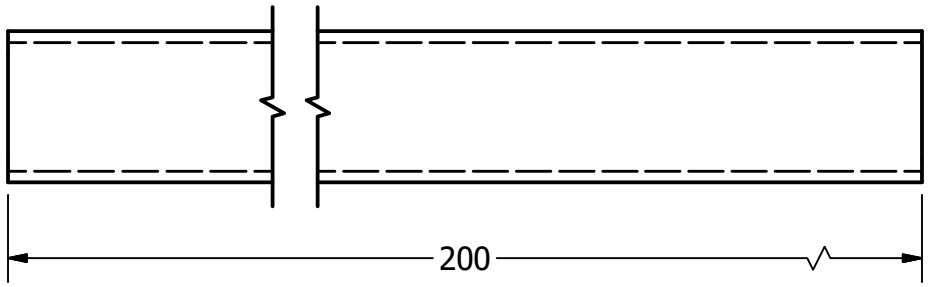

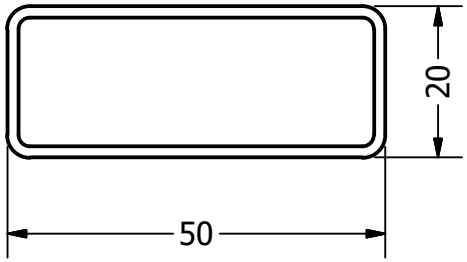

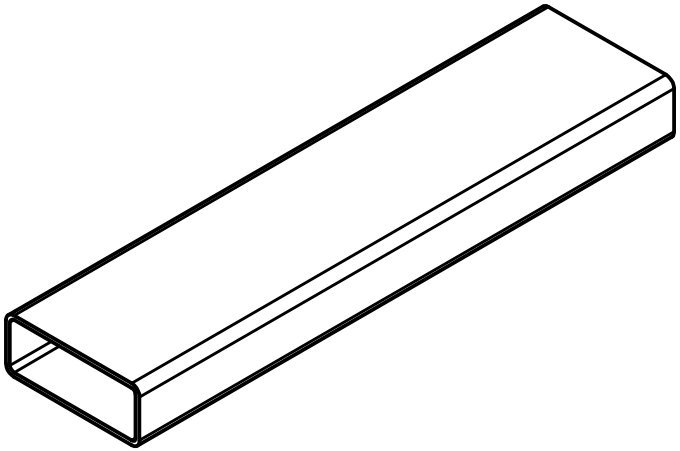

Proyect Crowd bicycle trailer		Created by D. Mosquera	Approved by D. Jeager		
Part Name steel-pipe 20x50x200		Part Code 1.4.2	Document Type Part	Material Steel A36	
Redesigned by	Original drawing from	License CC-BY-SA 4.0	File Name oseg_cbt_steel-pipe 20x50x0.20.ipt	Version 1.0	Quantity 1
			Scale 1:1	Sheet 23	Date 04.12.20

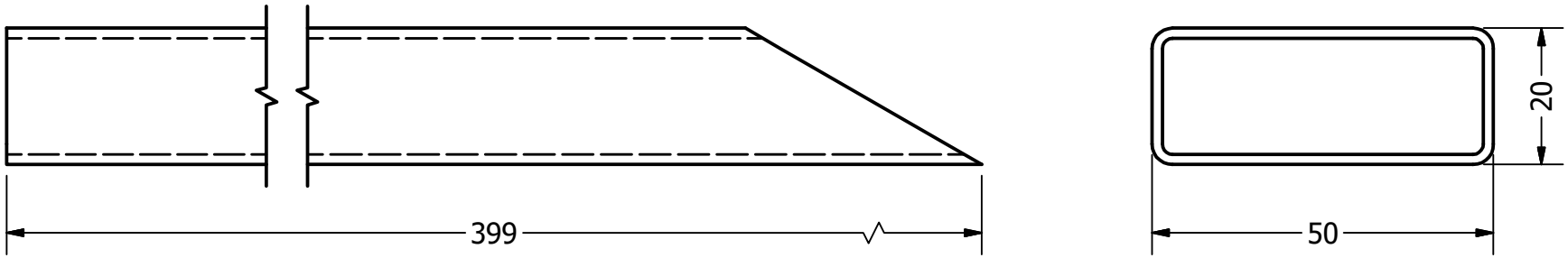

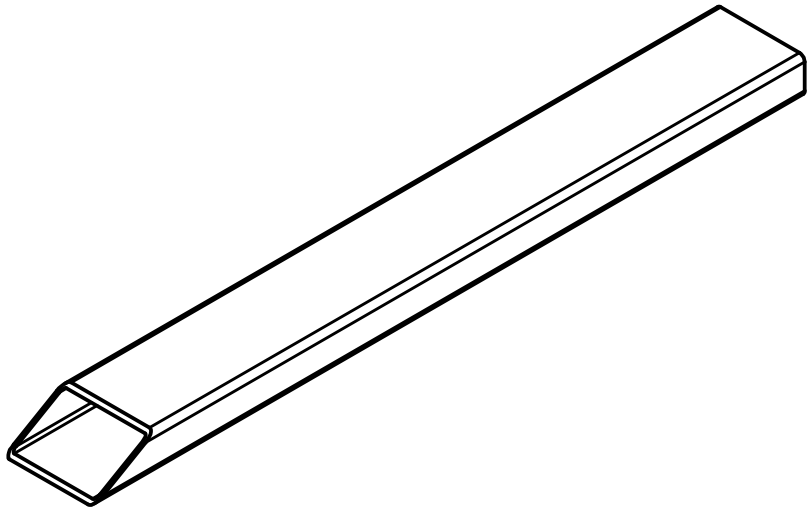

Proyect Crowd bicycle trailer	Created by D. Mosquera	Approved by D. Jeager	
Part Name steel-pipe 20x50x400	Part Code 1.4.2	Document Type Part	Material Steel A36
Redesigned by	Original drawing from	License CC-BY-SA 4.0	File Name oseg_cbt_steel-pipe 20x50x0.40.ipt
Version 1.0	Quantity 1	Scale 1:1	Sheet 24
Date 04.12.20			

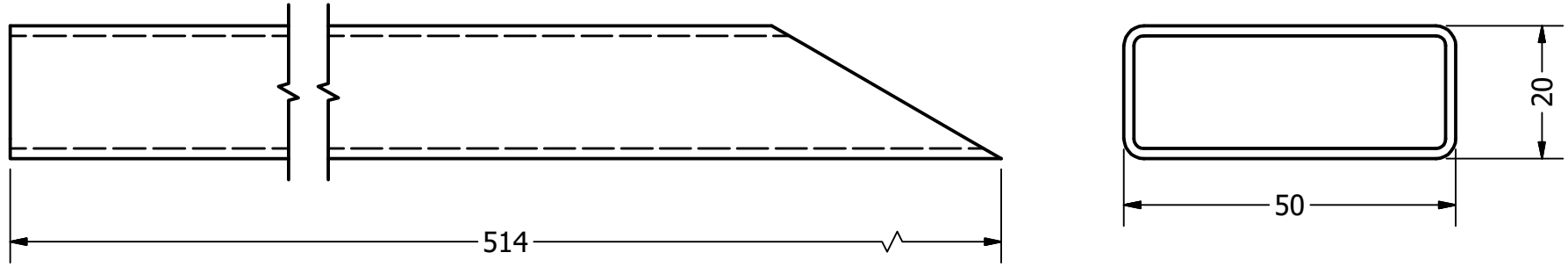

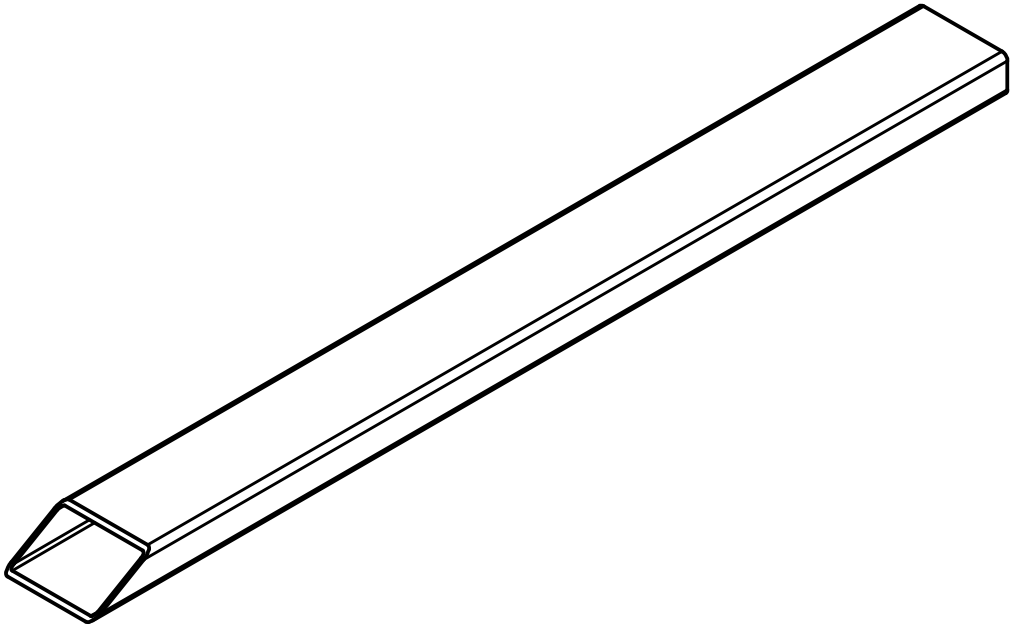

Proyect Crowd bicycle trailer		Created by D. Mosquera	Approved by D. Jeager		
Part Name steel-pipe 20x50x500		Part Code 1.4.3	Document Type Part	Material Steel A36	
Redesigned by	Original drawing from	License CC-BY-SA 4.0	File Name oseg_cbt_steel-pipe 20x50x0.50.ipt	Version 1.0	Quantity 1
			Scale 1:1	Sheet 25	Date 04.12.20

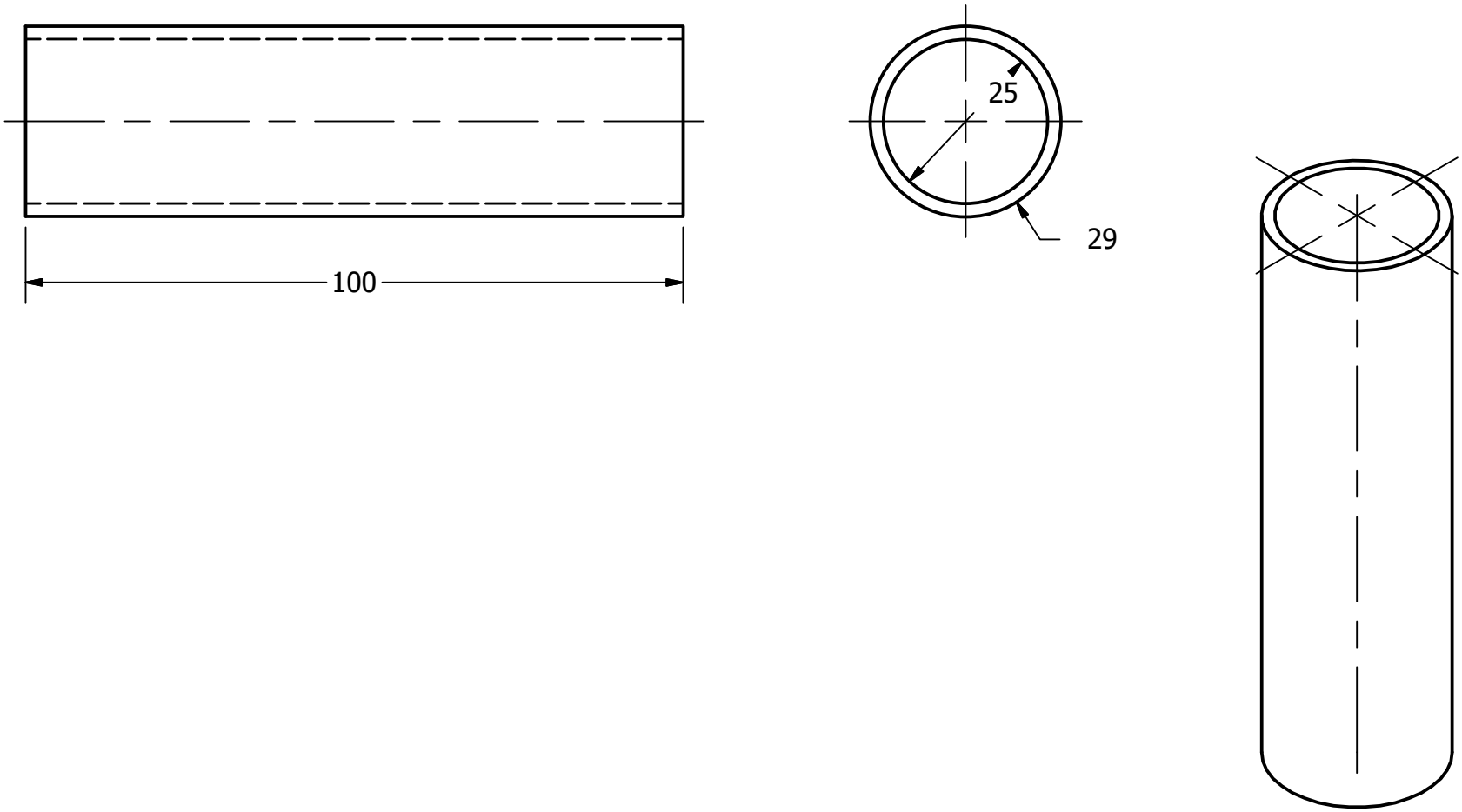

Proyect Crowd bicycle trailer		Created by D. Mosquera	Approved by D. Jeager		
Part Name Bush		Part Code 1.4.4	Document Type Part	Material Steel A36	
Redesigned by	Original drawing from	License CC-BY-SA 4.0	File Name oseg_cbt_Bush.ipt	Version 1.0	Quantity 1
			Scale 1:1	Sheet 26	Date 04.12.20

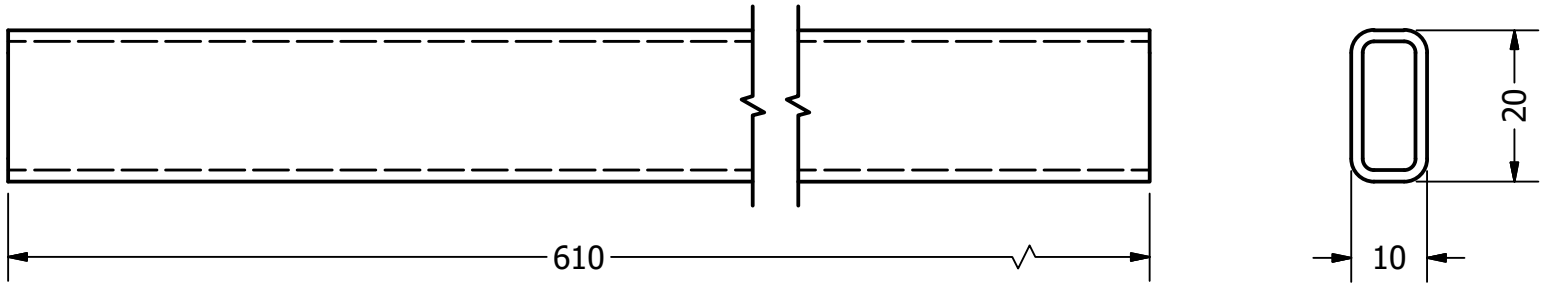

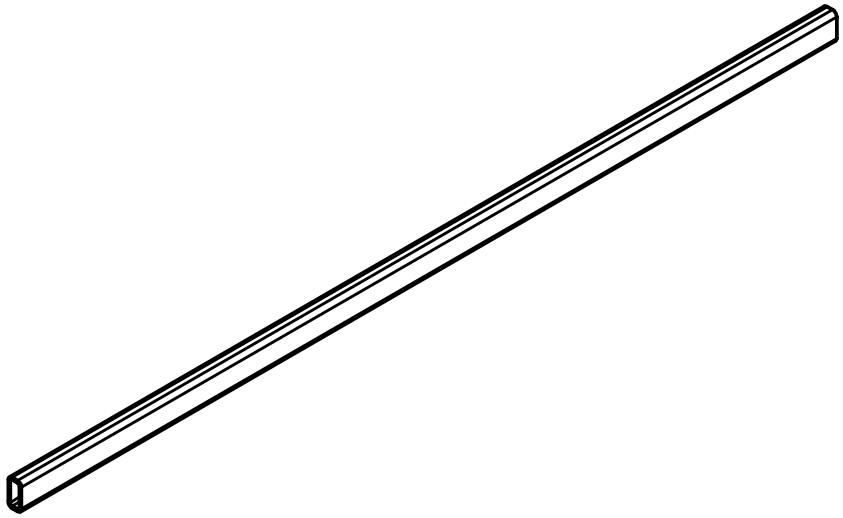

Proyect Crowd bicycle trailer		Created by D. Mosquera	Approved by D. Jeager		
Part Name steel-pipe 20x10x610		Part Code 1.5	Document Type Part	Material Steel A36	
Redesigned by	Original drawing from	License CC-BY-SA 4.0	File Name oseg_cbt_steel-pipe 20x10x610.ipt	Version 1.0	Quantity 1
			Scale 1:1	Sheet 27	Date 04.12.20

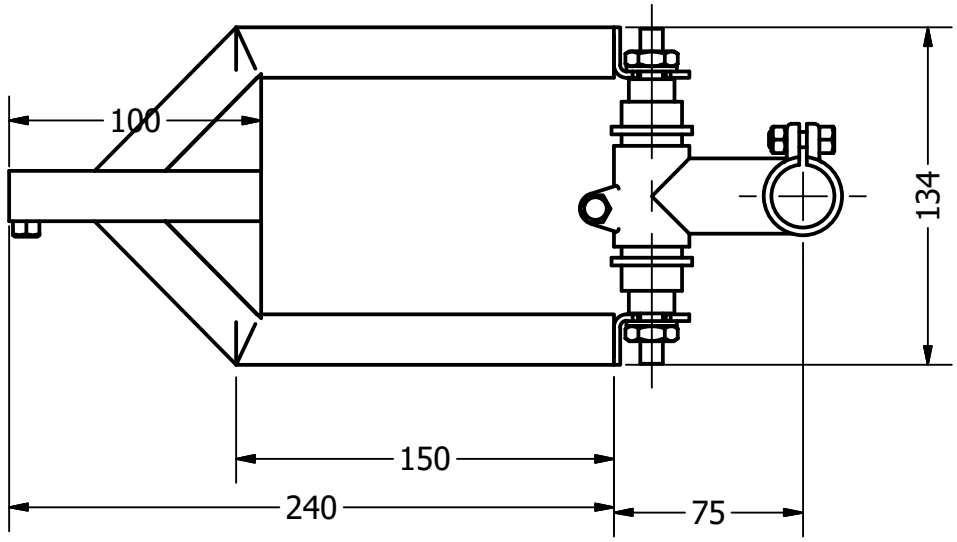

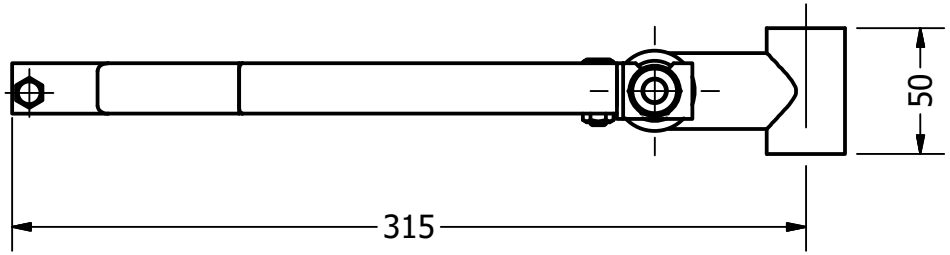

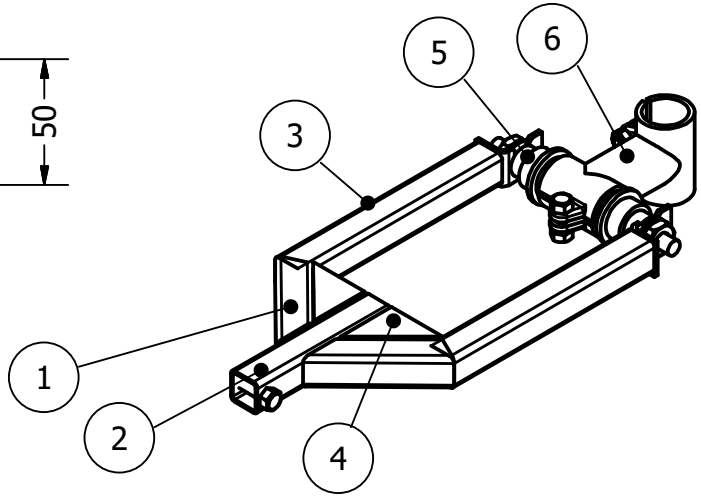

Proyect Crowd bicycle trailer		Created by D. Mosquera	Approved by D. Jeager		
Part Name support fork		Part Code 3	Document Type ASSEMBLY	Material	
Redesigned by	Original drawing from	License CC-BY-SA 4.0	File Name oseg_cbt_support fork.iam	Version 1.0	Quantity 1
			Scale 1:1	Sheet 28	Date 04.12.20

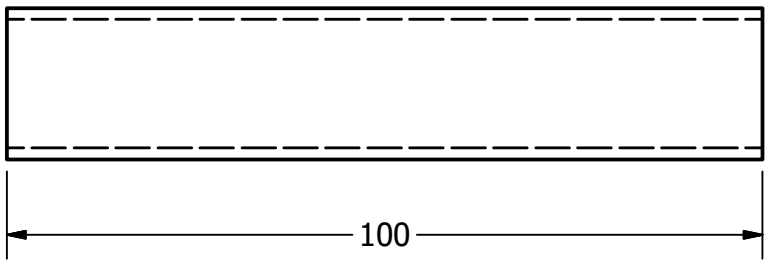

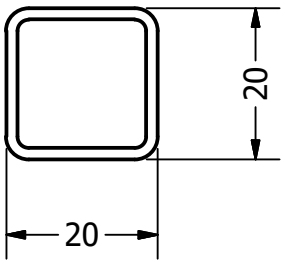

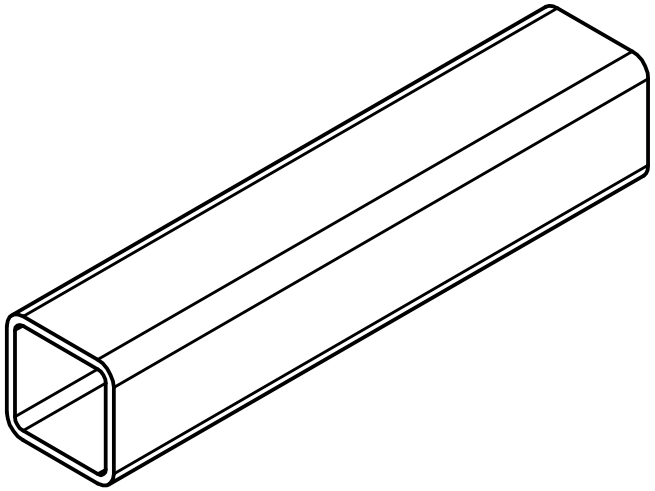

Proyect: Crowd bicycle trailer	Created by: D. Mosquera	Approved by: D. Jeager	
Part Name: steel-pipe 20x20x100	Part Code: 3.2	Document Type: Part	Material: Steel A36
Redesigned by	Original drawing from	License: CC-BY-SA 4.0	File Name: oseg_cbt_steel-pipe 20x20x100.ipt
Version: 1.0	Quantity: 1	Scale: 1:1	Sheet: 29
Date: 04.12.20			

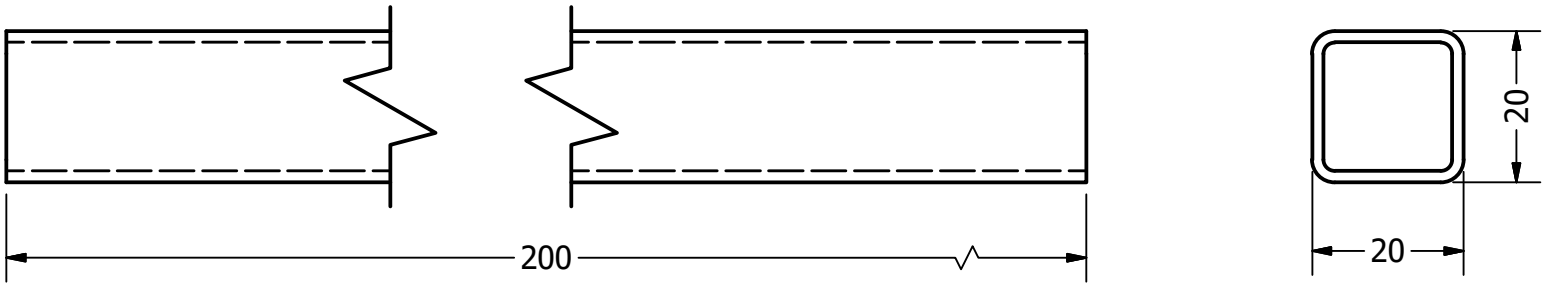

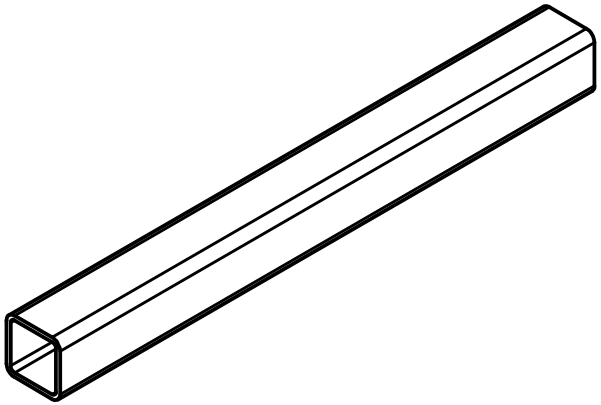

Proyect Crowd bicycle trailer		Created by D. Mosquera	Approved by D. Jeager		
Part Name steel-pipe 20x20x200		Part Code 3.3	Document Type Part	Material Steel A36	
Redesigned by	Original drawing from	License CC-BY-SA 4.0	File Name oseg_cbt_steel-pipe 20x20x0.20.ipt	Version 1.0	Quantity 1
			Scale 1:1	Sheet 30	Date 04.12.20

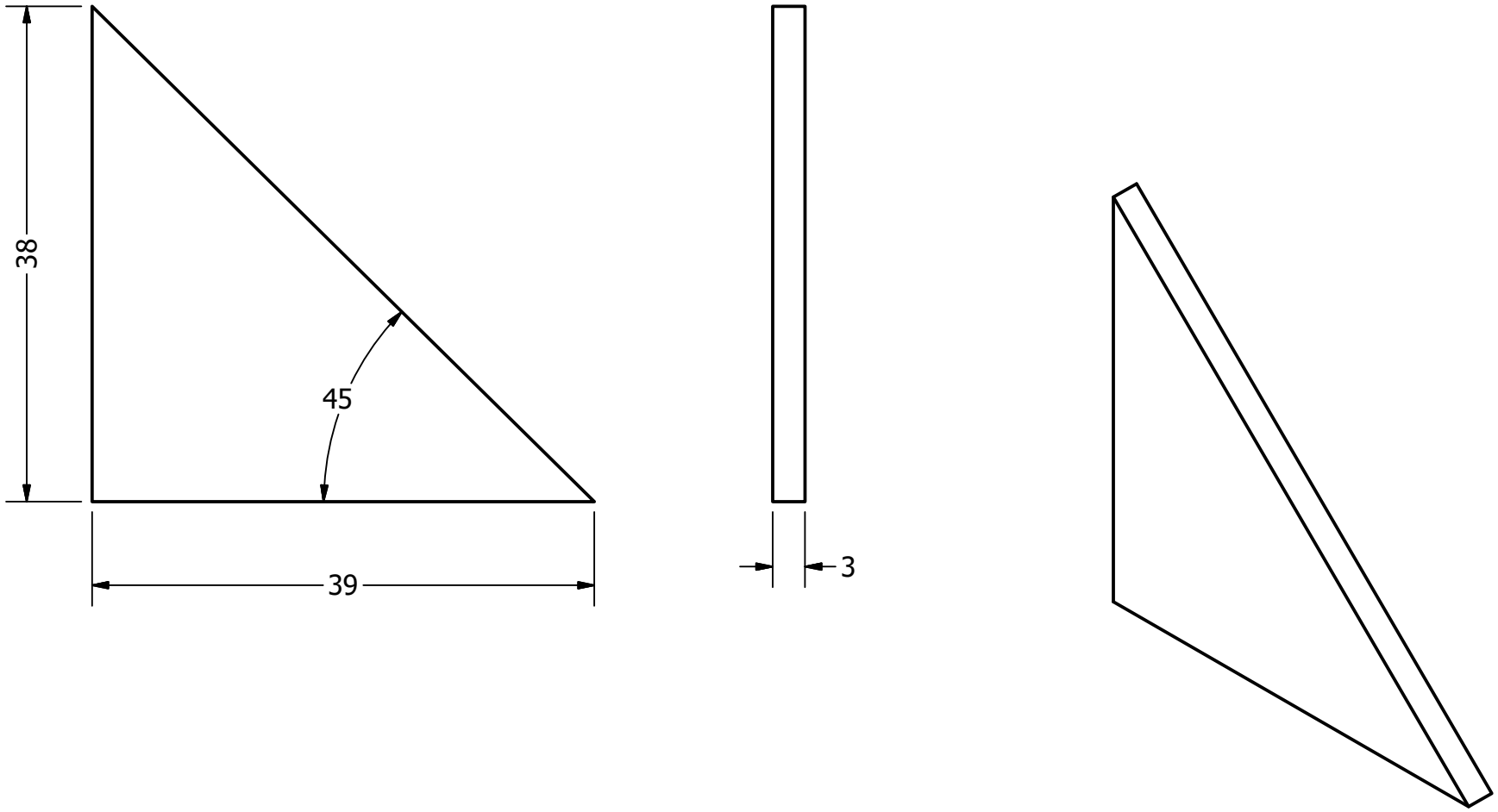

Proyect Crowd bicycle trailer		Created by D. Mosquera	Approved by D. Jeager		
Part Name triangular flancher		Part Code 3.4	Document Type Part	Material Steel C45	
Redesigned by	Original drawing from	License CC-BY-SA 4.0	File Name oseg_cbt_triangular-flancher.ipt	Version 1.0	Quantity 1
			Scale 1:1	Sheet 31	Date 04.12.20

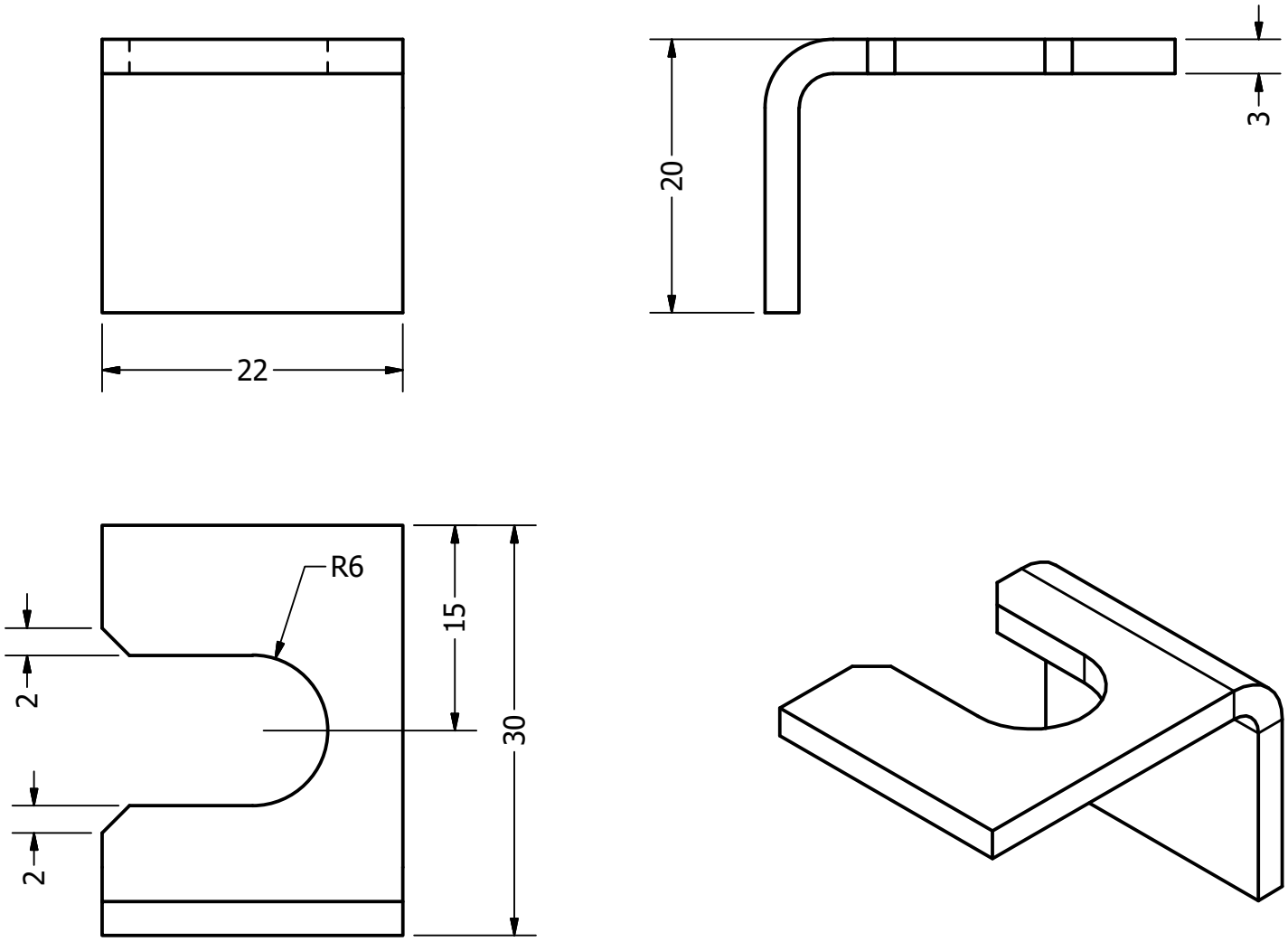

Proyect Crowd bicycle trailer		Created by D. Mosquera	Approved by D. Jeager		
Part Name Brake axis rate		Part Code 3.5	Document Type Part	Material Steel C45	
Redesigned by	Original drawing from	License CC-BY-SA 4.0	File Name oseg_cbt_Brake-axi-rate.ipt	Version 1.0	Quantity 1
			Scale 1:1	Sheet 32	Date 04.12.20

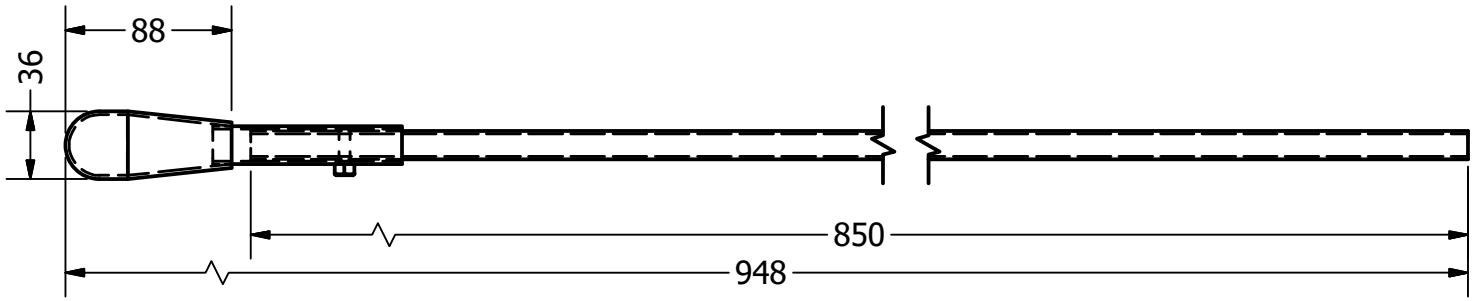

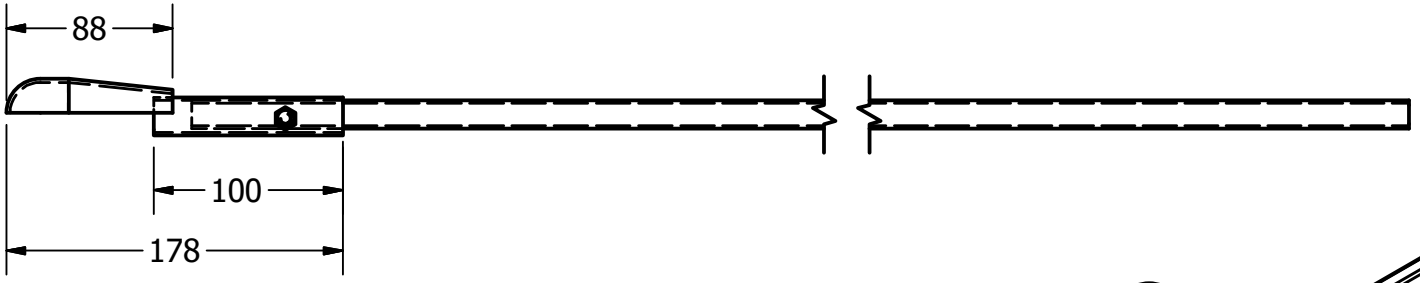

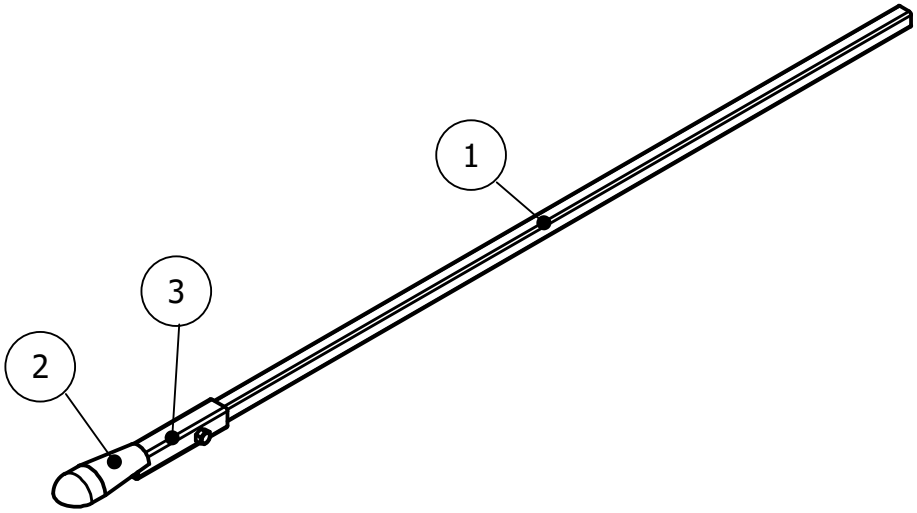

Proyect Crowd bicycle trailer		Created by D. Mosquera	Approved by D. Jeager		
Part Name tow bar		Part Code 4	Document Type Assembly	Material	
Redesigned by	Original drawing from	License CC-BY-SA 4.0	File Name oseg_cbt_tow bar.iam	Version 1.0	Quantity 1
			Scale 1:1	Sheet 33	Date 04.12.20

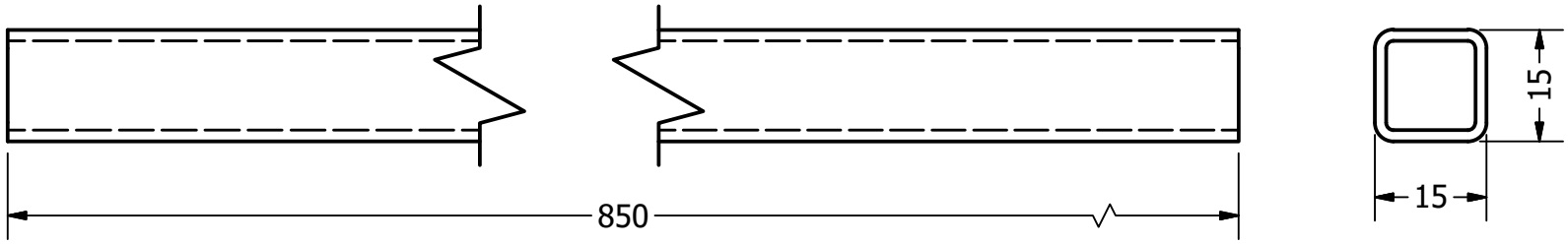

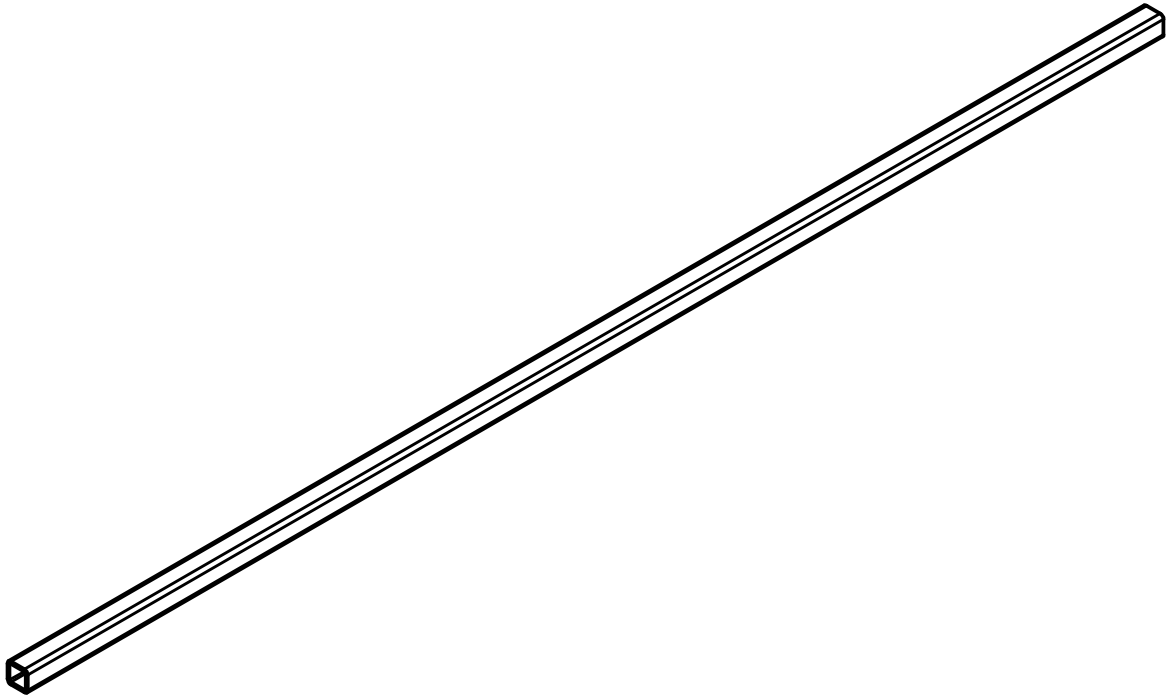

Proyect Crowd bicycle trailer		Created by D. Mosquera	Approved by D. Jeager		
Part Name Steel pipe 20x20x850		Part Code 4.1	Document Type Part	Material Steel A36	
Redesigned by	Original drawing from	License CC-BY-SA 4.0	File Name cseg_cbt_steel-pipe 15x15x0.85.ipt	Version 1.0	Quantity 1
			Scale 1:1	Sheet 34	Date 04.12.20

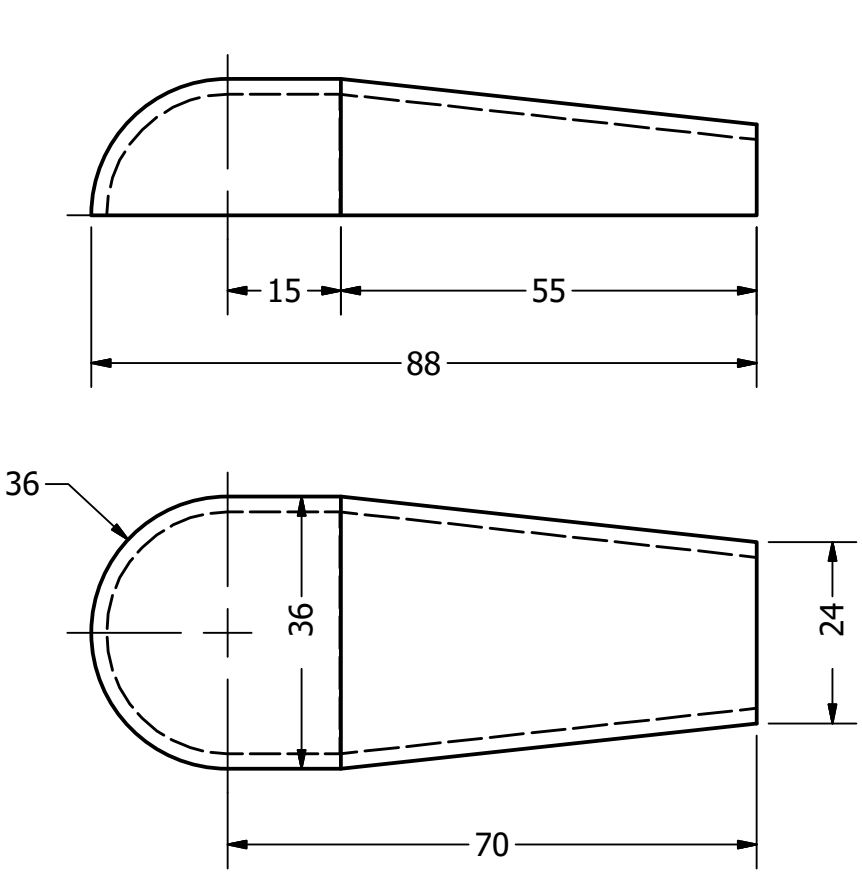

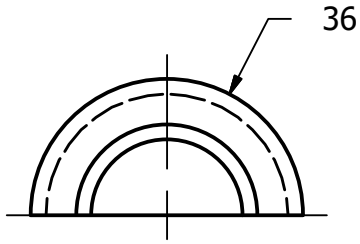

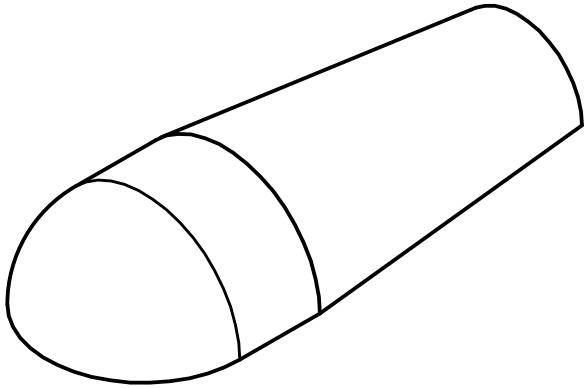

Proyect Crowd bicycle trailer		Created by D. Mosquera	Approved by D. Jeager		
Part Name coupling		Part Code 4.2	Document Type Part	Material Steel C45	
Redesigned by	Original drawing from	License CC-BY-SA 4.0	File Name oseg_cbt_coupling.ipt	Version 1.0	Quantity 1
			Scale 1:1	Sheet 35	Date 04.12.20