Note: This part is bended.

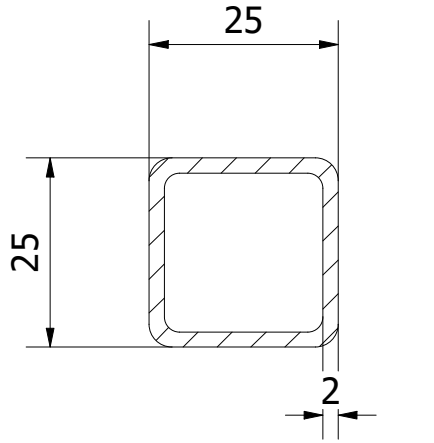

BL-BL (1 : 1)

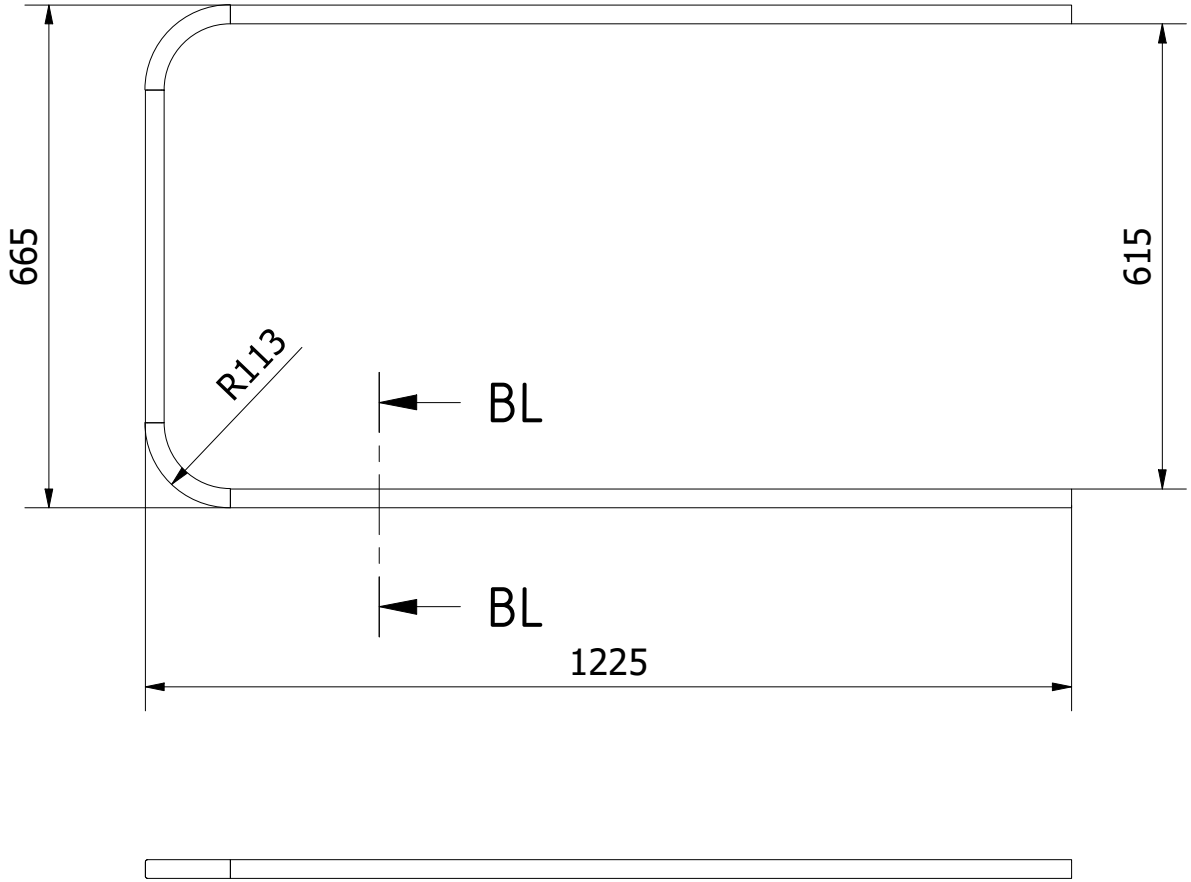

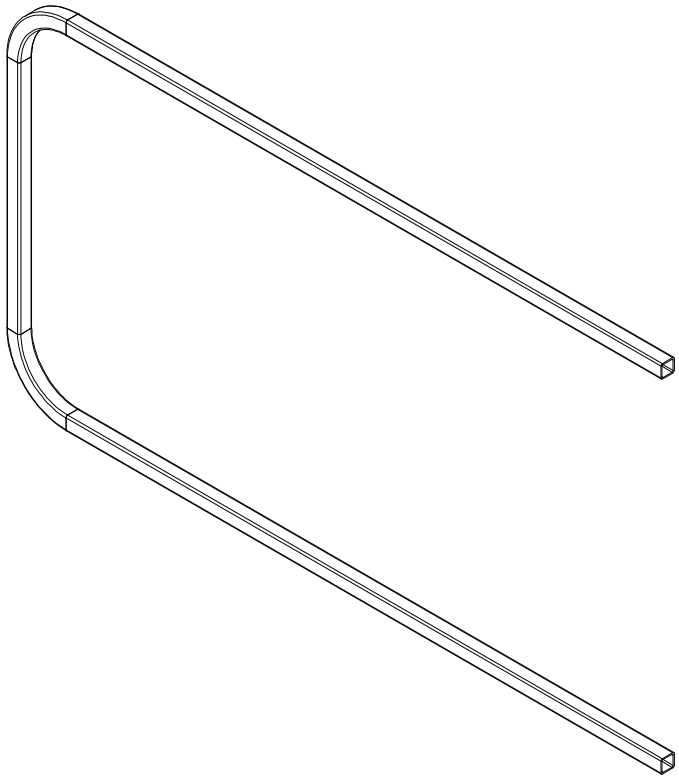

Note: All units in mm.

PROJECT	CREATED BY	APPROVED BY	DATE	VERSION
Convertible Bicycle Trailer for People - with shock absorber	J. Rosciano	A. Morillo	26/07/2021	1.1
PART NAME	FILE NAME			POS
Upper frame A	Upper frame A.ipt			7.1

DEVELOPED BY	REDESIGNED BY	DOC. TYPE	MATERIAL	QUANTITY
		Part	ASTM A36	1
		LICENCE	SCALE	SHEET
Practical Action	OHO e.V.	CC-BY-SA 4.0	1/10	42 /51