Proyect zigzag solar water heater		Created by D. Mosquera	Approved by D. Jeager		
Part Name zigzag solar water heater		Part Code A1	Document Type ASSEMBLY	Material	
Redesigned by OPEN SOURCE ECOLOGY GERMANY	Original drawing from Practical ACTION	License CERN-OHL	File Name oseg_zswh_A1_zigzag-solar-water-heater	Version 1.0	Quantity 1
			Scale 1:15	Sheet 1	Date 10.02.21

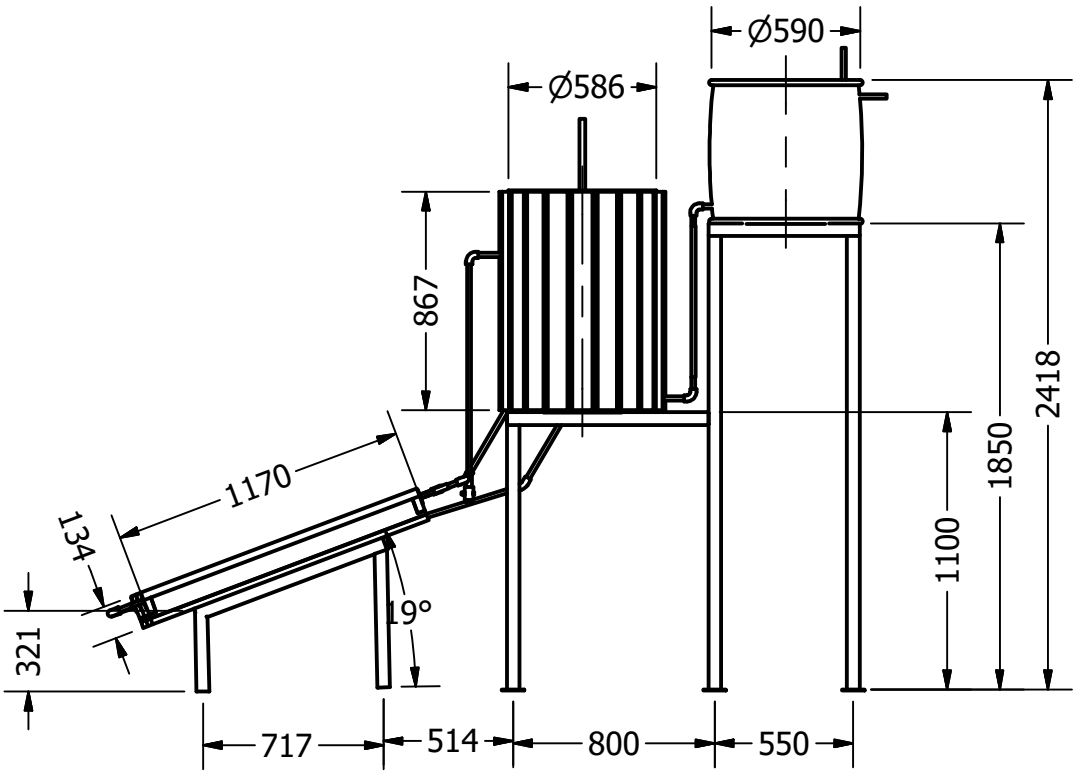

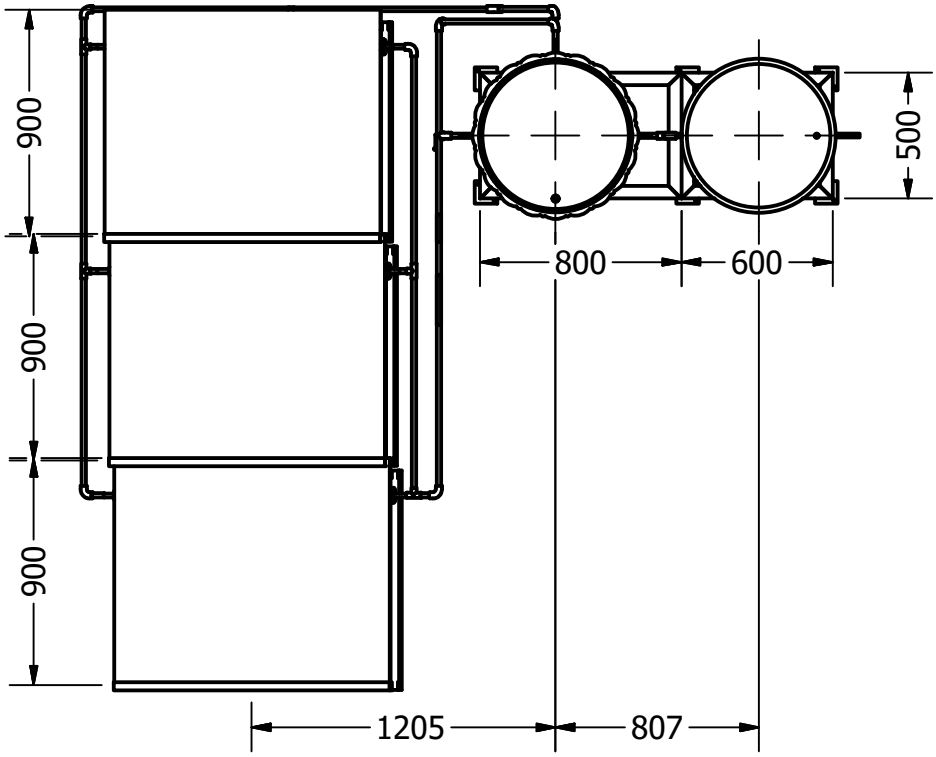

Proyect zigzag solar water heater		Created by D. Mosquera	Approved by D. Jeager		
Part Name zigzag solar water heater		Part Code A1	Document Type assembly	Material	
Redesigned by OPEN SOURCE ECOLOGY GERMANY	Original drawing from Practical ACTION	License CERN-OHL	File Name oseg_zswh_A1_zigzag-solar-water-heater.iam	Version 1.0	Quantity 1
			Scale 1 / 30	Sheet 2	Date 10.02.21

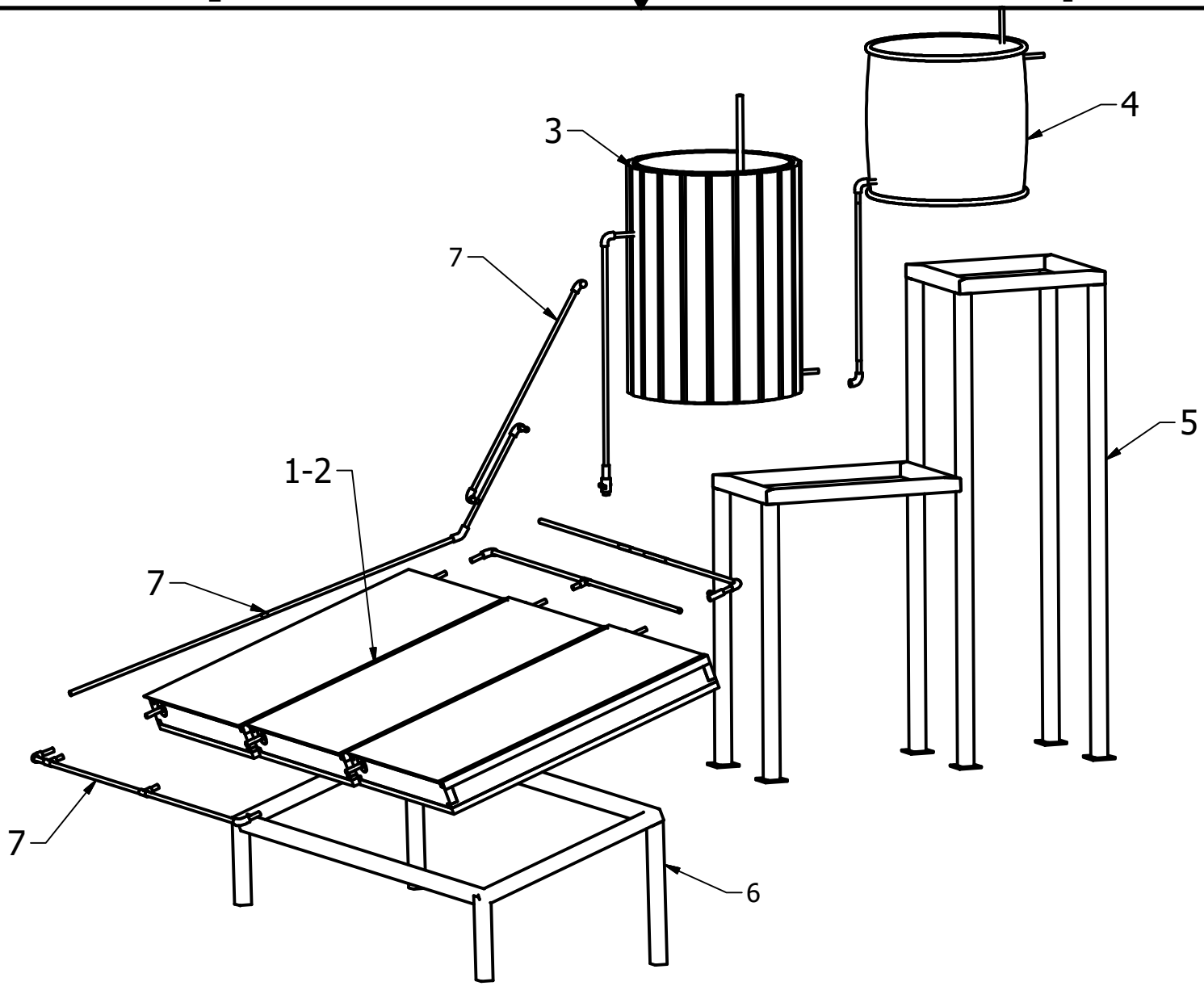

Proyect zigzag solar water heater		Created by D. Mosquera	Approved by D. Jeager		
Part Name zigzag solar water heater		Part Code A2	Document Type ASSEMBLY	Material	
Redesigned by OPEN SOURCE ECOLOGY GERMANY	Original drawing from Practical ACTION	License CERN-OHL	File Name oseg_zswh_A1_zigzag-solar-water-heater.ipn	Version 1.0	Quantity 1
			Scale 1:10	Sheet 3	Date 10.02.21

Pos.	Pos. old	Qty.	Part name	File name (new)	Part type	Specifications	Sh.
A1			zigzag solar water heater	oseg_zswh_A1_zigzag-solar-water-heater.iam	production		1
			zigzag solar water heater		Assembly		2
B			Part list	oseg_zswh_B_parts-list.	parts list		3
1	2.1	3	The Absorber	oseg_zswh_Absorber.iam	Production		
1.1	2.1.1	3	1/2" galvanised pipe	oseg_zswh_zig-zag-1/2"-galvanised-pipe.ipt	Production		
1.2	2.1.4	3	galvanised sheet	oseg_zswh_galvanised-sheet.ipt	Production		
1.3		48	saddles	oseg_zswh_saddles.ipt	Production		
1.4		180	rivets 9,4 x 18	9,4 x 18 x 0,3 - SV 34.ipt	Standard	rivets 9,4 x 18 expand	
2	2.2	3	collector-box	oseg_zswh_collector-box.iam	Production		
2.1		6	sides planks	oseg_zswh_sides-planks.ipt	Production		
2.2		6	front planks	oseg_zswh_front-planks.ipt	Production		
2.3		6	supporting laths	oseg_zswh_supporting-laths.ipt	Production		
2.4		3	bottom plank	oseg_zswh_bottom-plank.ipt	Production		
2.5		3	insulating material	oseg_zswh_insulating-material.ipt	Production	empty bags of fibre with sawdust, Coconut-fibre, glass-wool or any kind of other insulating material.	
2.6		3	cover glass	oseg_zswh_cover-glass.ipt	Production		
2.7		8	rubber strip	oseg_zswh_rubber-strip.ipt	Production		
2.8		3	angle section	oseg_zswh_angle-section.ipt	production	Angle section aluminum 25x25x3; L: 1180	
3	3	1	insulated storage tank	oseg_zswh_insulated-storage-tank.iam	Production		
3.1		1	storage tank	oseg_zswh_storage-tank.ipt	Standard	2000-litredrum	
3.2		4	galvanised pipe 1/2"	oseg_zswh_galvanised pipe 1/2"x150.ipt	production		
3.3		2	galvanised pipe 3/4"	oseg_zswh_galvanised pipe 3/4"x300.ipt	production		
3.4		1	insulating material	oseg_zswh_insulating-material.ipt	Production		

Proyect zigzag solar water heater	Created by D. Mosquera	Approved by D. Jeager			
Part Name zigzag solar water heater	Part Code B	Document Type part-list		Material	
Redesigned by OPEN SOURCE ECOLOGY GERMANY	Original drawing from Practical ACTION	License CERN-OHL	File Name oseg_zswh_A1_zigzag-solar-water-heater	Version 1.0	Quantity 1
			Scale	Sheet 4	Date 10.02.21

Pos.	Pos. old	Qty.	Part name	File name (new)	Part type	Specifications	Sh.
4	4		the buffer tank	oseg_zswh_the-buffer-tank.iam	production		
4.1		1	storage tank	oseg_zswh_storage-tank.ipt	Standard	half 2000-litre drum	
4.2		3	galvanised pipe 1/2"	oseg_zswh_galvanised-pipe-1/2"x150.ipt	production		
4.3		1	floating gauge	oseg_zswh_floating-gauge.ipt	Standard		
5		1	foundation storage tank	oseg_zswh_foundation-structure.iam	production		
5.1		4	steel-pipe 50x50x500	oseg_zswh_steel-pipe 50x50x500.ipt	production		
5.2		2	steel-pipe 50x50x600	oseg_zswh_steel-pipe 50x50x600.ipt	production		
5.3		2	steel-pipe 50x50x800	oseg_zswh_steel-pipe 50x50x800.ipt	production		
5.4		2	steel-pipe 50x50x1050	oseg_zswh_steel-pipe 50x50x1050.ipt	production		
5.5		4	steel-pipe 50x50x1800	oseg_zswh_steel-pipe 50x50x1800.ipt	production		
5.6		6	rectangular flancher	oseg_zswh_rectangular-flancher.ipt	production		
6		1	base collector	oseg_zswh_base-collector.iam	production		
6.1		2	steel-pipe 50x50x330	oseg_zswh_steel-pipe 50x50x330.ipt	production		
6.2		2	steel-pipe 50x50x600	oseg_zswh_steel-pipe 50x50x600.ipt	production		
6.3		2	steel-pipe 50x50x800	oseg_zswh_steel-pipe 50x50x800.ipt	production		
6.4		2	steel-pipe 50x50x2300	oseg_zswh_steel-pipe 50x50x2300.ipt	production		
7			pipe fitting and accesories				
7.1		6	galvanised pipe 1/2" x 450	oseg_zswh_galvanised-pipe-1/2"x450.ipt	Standard		
7.2		3	galvanised pipe 1/2" x 600	oseg_zswh_galvanised-pipe-1/2"x600.ipt	Standard		
7.3		2	galvanised pipe 1/2" x 830	oseg_zswh_galvanised-pipe-1/2"x830.ipt	Standard		
7.4		10	galvanised elbow 1/2"-90º	oseg_zswh_galvanised-elbow-1/2"-90.ipt	Standard		
7.5		4	galvanised tee 1/2"-90º	oseg_zswh_galvanised-tee-1/2"-90.ipt	Standard		

Proyect zigzag solar water heater	Created by D. Mosquera	Approved by D. Jeager			
Part Name zigzag solar water heater	Part Code B	Document Type part-list	Material		
Redesigned by OPEN SOURCE ECOLOGY GERMANY	Original drawing from Practical ACTION	License CERN-OHL	File Name oseg_zswh_A1_zigzag-solar-water-heater	Version 1.0	Quantity 1
			Scale	Sheet 5	Date 10.02.21

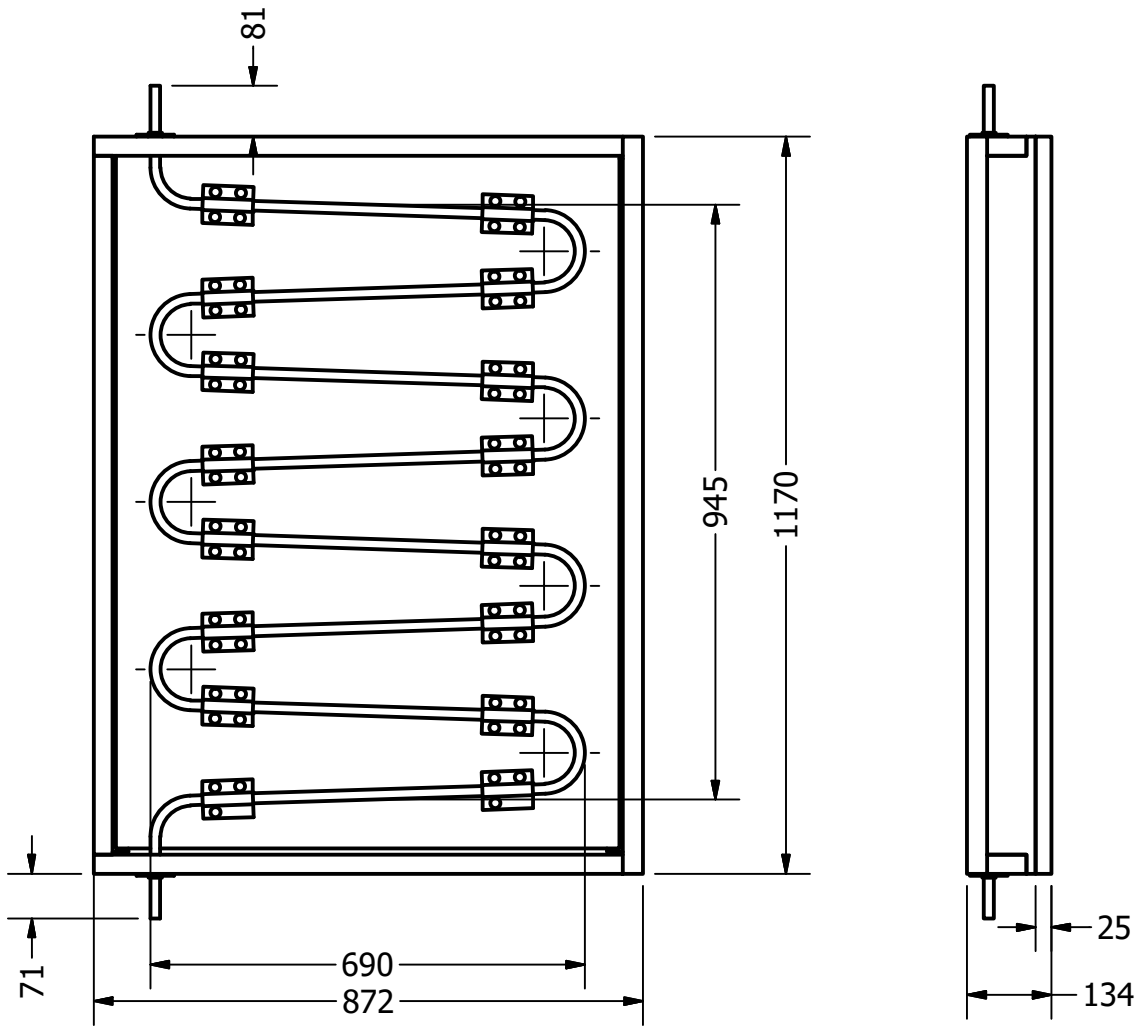

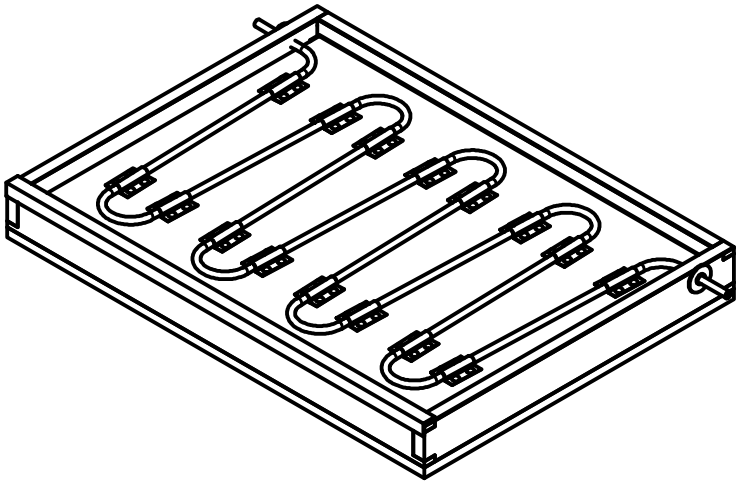

Proyect zigzag solar water heater		Created by D. Mosquera	Approved by D. Jeager		
Part Name absorber collector		Part Code 1	Document Type assembly	Material	
Redesigned by OPEN SOURCE ECOLOGY GERMANY	Original drawing from Practical ACTION	License CERN-OHL	File Name oseg_zswh_absorber-collector.iam	Version 1.0	Quantity 3
			Scale 1 /12	Sheet 6	Date 10.02.21

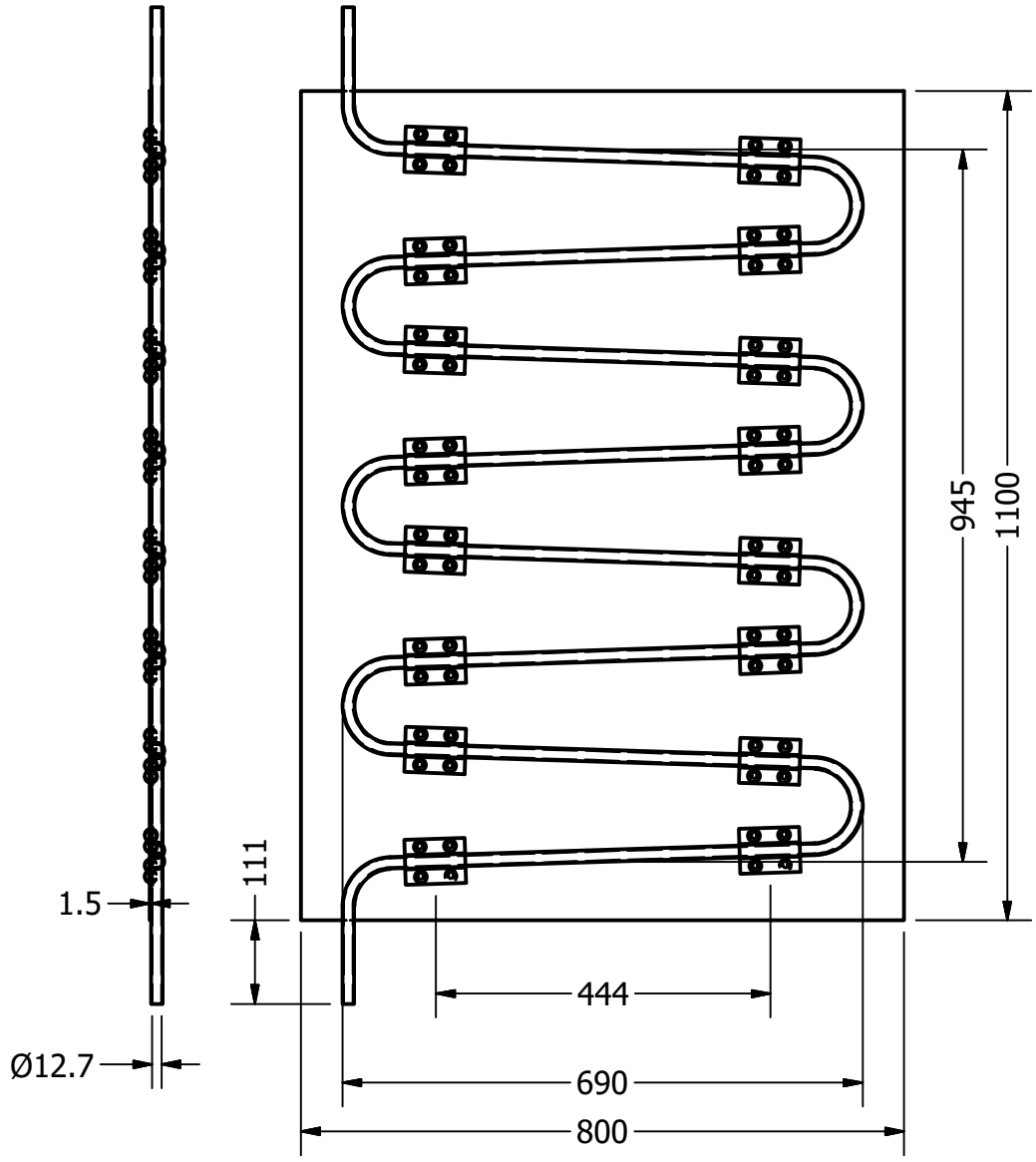

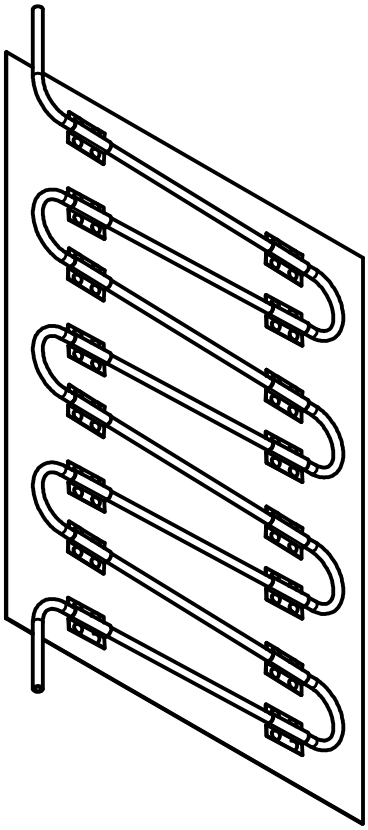

Proyect zigzag solar water heater		Created by D. Mosquera	Approved by D. Jeager		
Part Name absorber		Part Code 1	Document Type assembly	Material	
Redesigned by OPEN SOURCE ECOLOGY GERMANY	Original drawing from Practical ACTION	License CERN-OHL	File Name oseg_zswh_Absorber.iam	Version 1.0	Quantity 1
			Scale 1 /10	Sheet 7	Date 10.02.21

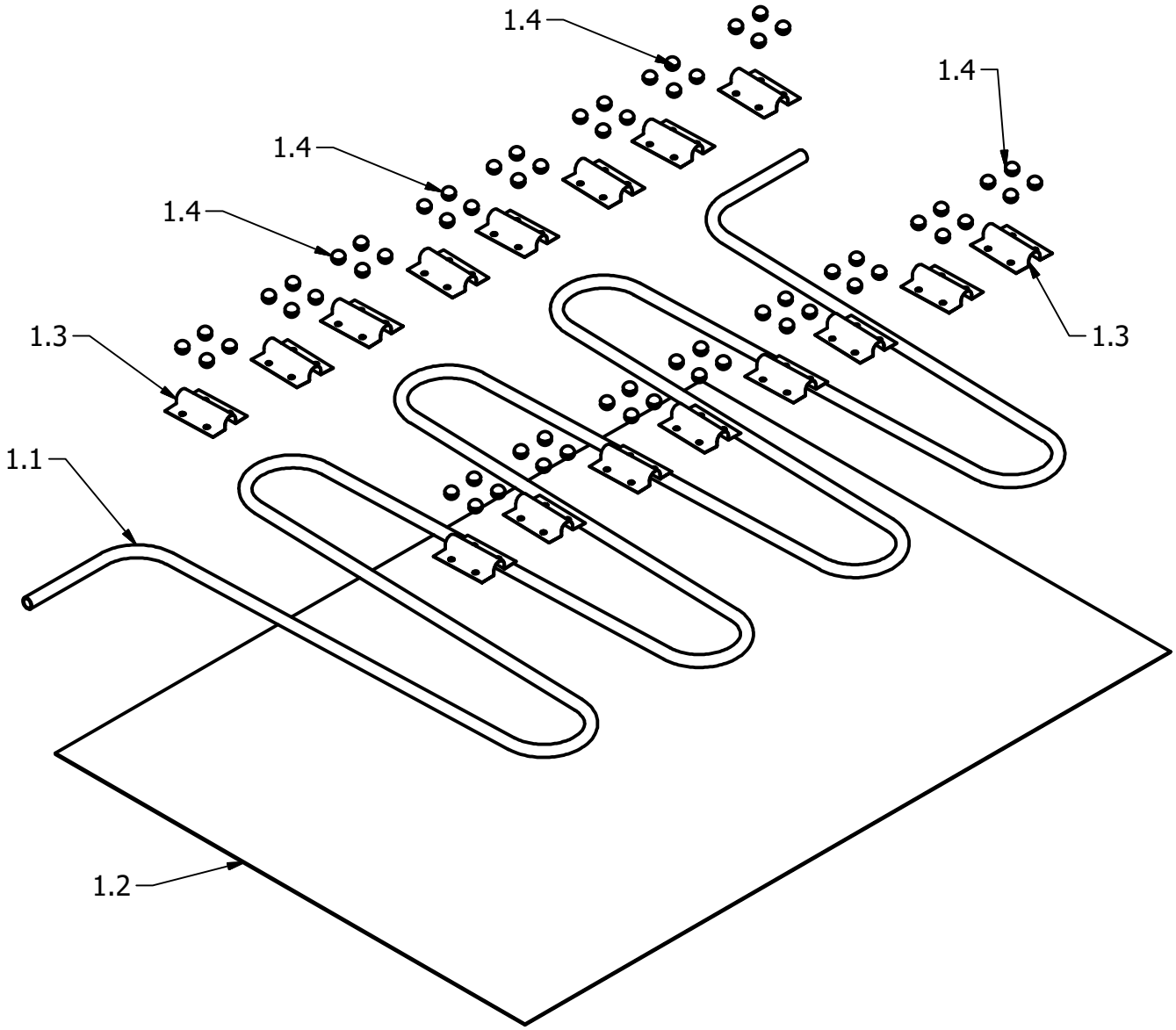

Proyect zigzag solar water heater		Created by D. Mosquera	Approved by D. Jeager		
Part Name absorber		Part Code 1	Document Type assembly	Material	
Redesigned by OPEN SOURCE ECOLOGY GERMANY	Original drawing from Practical ACTION	License CERN-OHL	File Name oseg_zswh_Absorber.iam	Version 1.0	Quantity 1
			Scale 1 /8	Sheet 8	Date 10.02.21

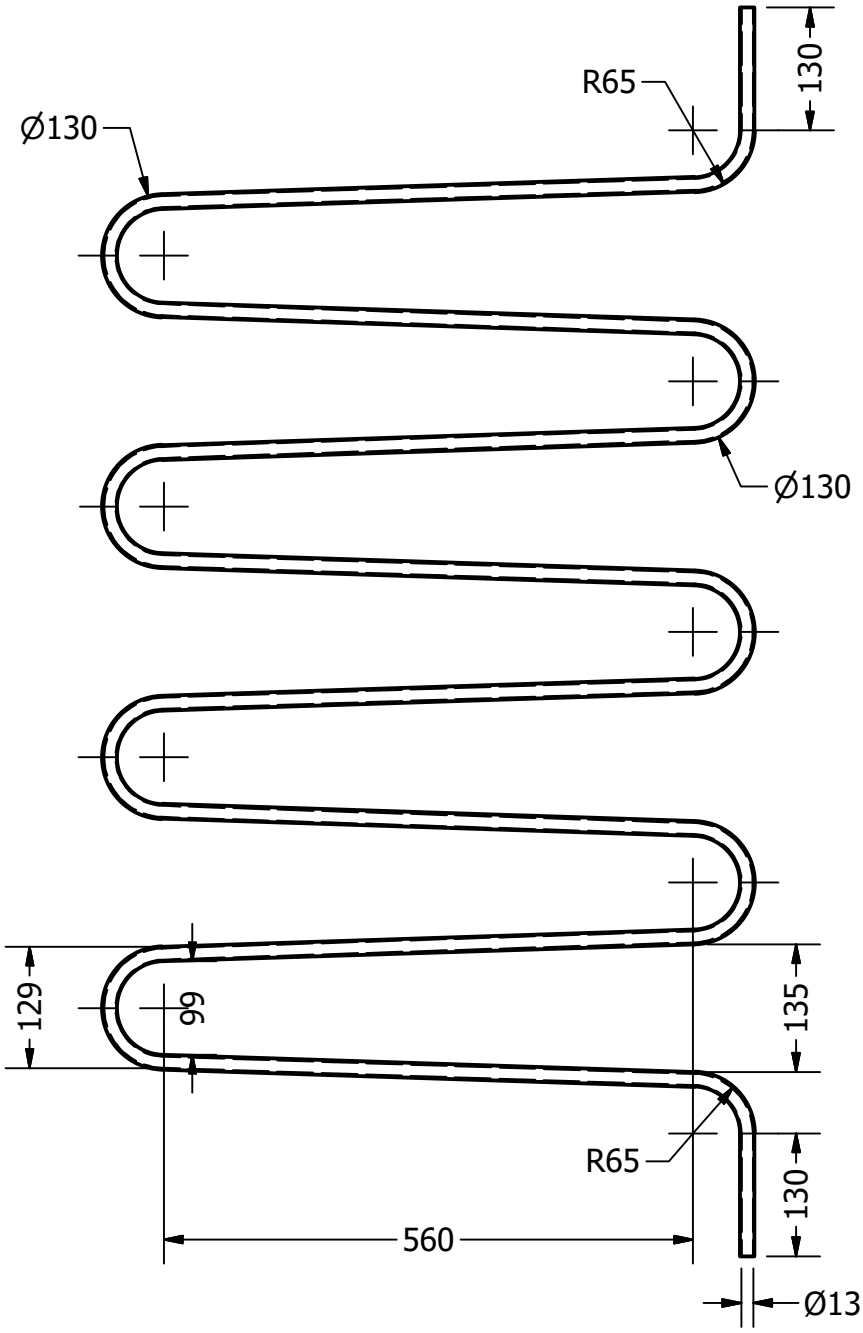

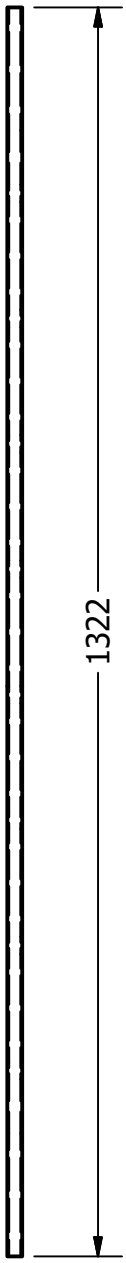

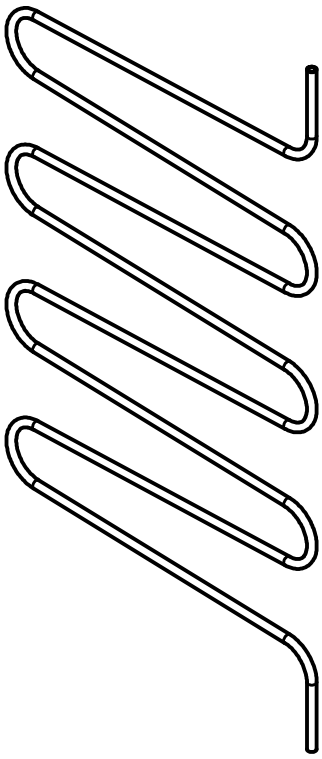

Proyect zigzag solar water heater		Created by D. Mosquera	Approved by D. Jeager		
Part Name zig-zag 1/2" galvanised pipe		Part Code 1.1	Document Type part	Material	
Redesigned by OPEN SOURCE ECOLOGY GERMANY	Original drawing from Practical ACTION	License CERN-OHL	File Name oseg_zswh_zig-zag-1-2plg-galvanised-pipe.ipt	Version 1.0	Quantity 3
			Scale 1 /8	Sheet 9	Date 10.02.21

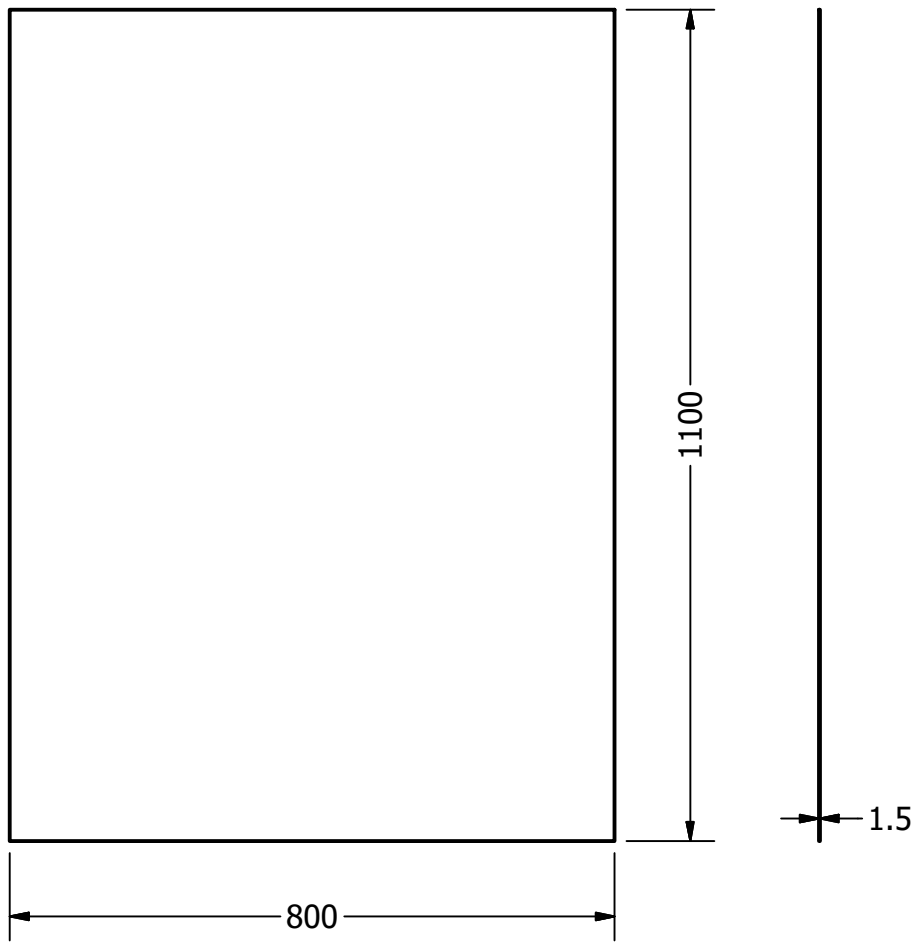

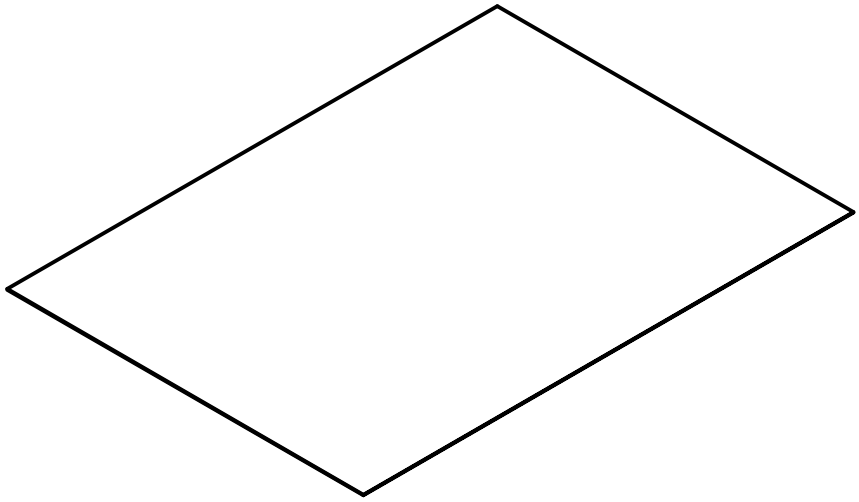

Proyect zigzag solar water heater		Created by D. Mosquera	Approved by D. Jeager		
Part Name galvanised sheet		Part Code 1.2	Document Type part	Material	
Redesigned by OPEN SOURCE ECOLOGY GERMANY	Original drawing from Practical ACTION	License CERN-OHL	File Name oseg_zswh_galvanised-sheet.ipt	Version 1.0	Quantity 1
			Scale 1 /10	Sheet 10	Date 10.02.21

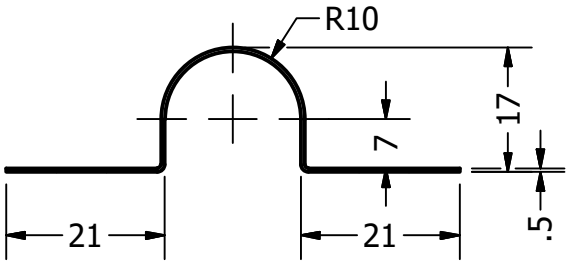

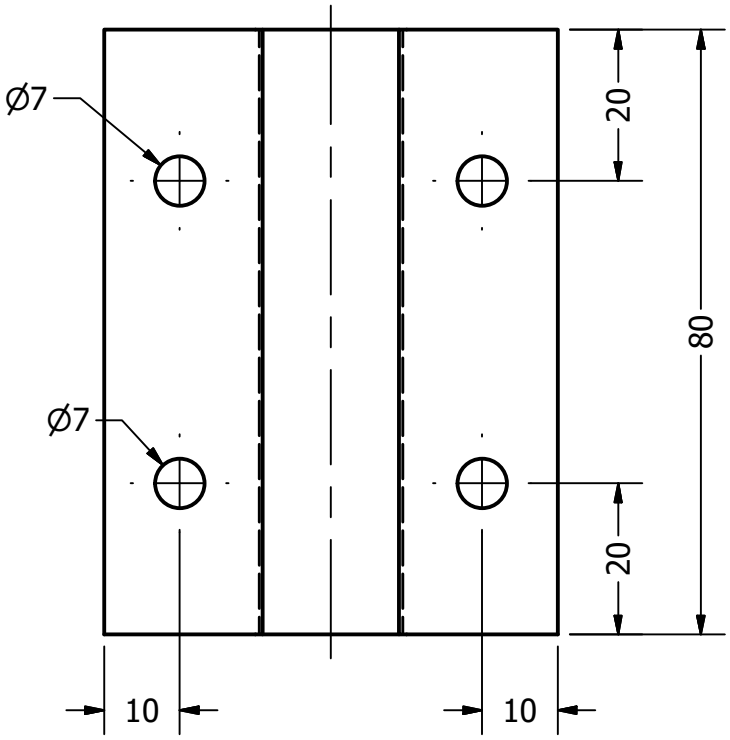

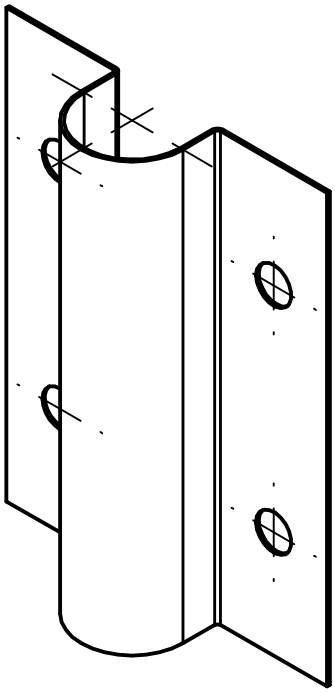

NOTE: Long. = 90.0

Proyect zigzag solar water heater		Created by D. Mosquera	Approved by D. Jeager		
Part Name saddles		Part Code 1.3	Document Type part	Material	
Redesigned by OPEN SOURCE ECOLOGY GERMANY	Original drawing from Practical ACTION	License CERN-OHL	File Name oseq_zswh_saddles.ipt	Version 1.0	Quantity 58
			Scale 1 : 1	Sheet 11	Date 10.02.21

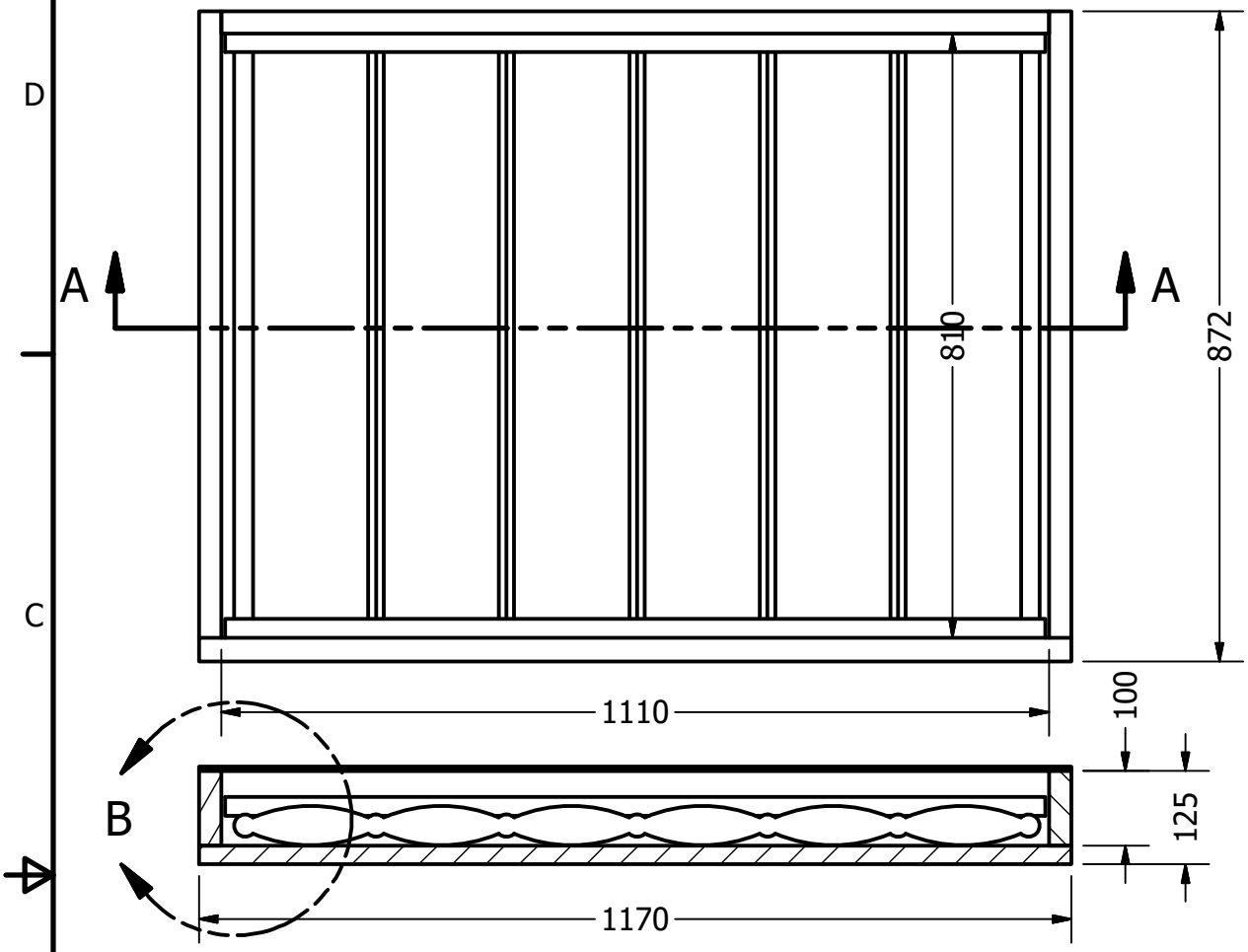

SECTION A-A

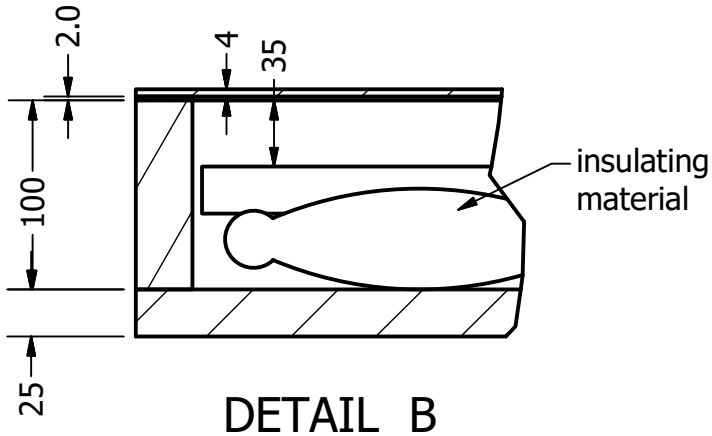

DETAIL B

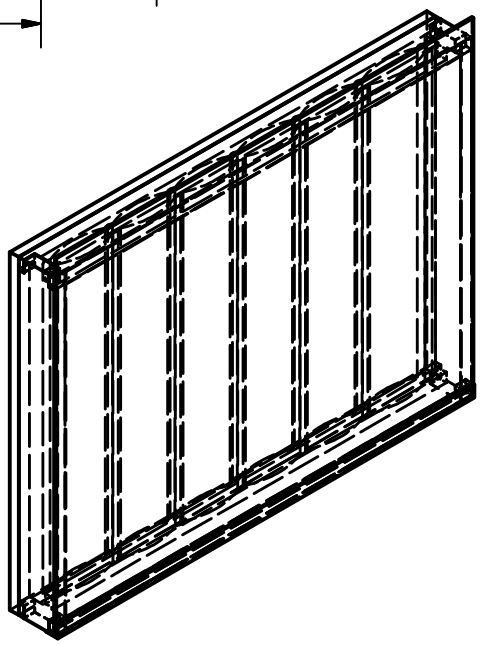

Proyect zigzag solar water heater		Created by D. Mosquera	Approved by D. Jeager		
Part Name collector box		Part Code 2	Document Type assembly	Material	
Redesigned by OPEN SOURCE ECOLOGY GERMANY	Original drawing from Practical ACTION	License CERN-OHL	File Name oseg_zswh_collector-box.iam	Version 1.0	Quantity 3
			Scale 1 /10	Sheet 12	Date 10.02.21

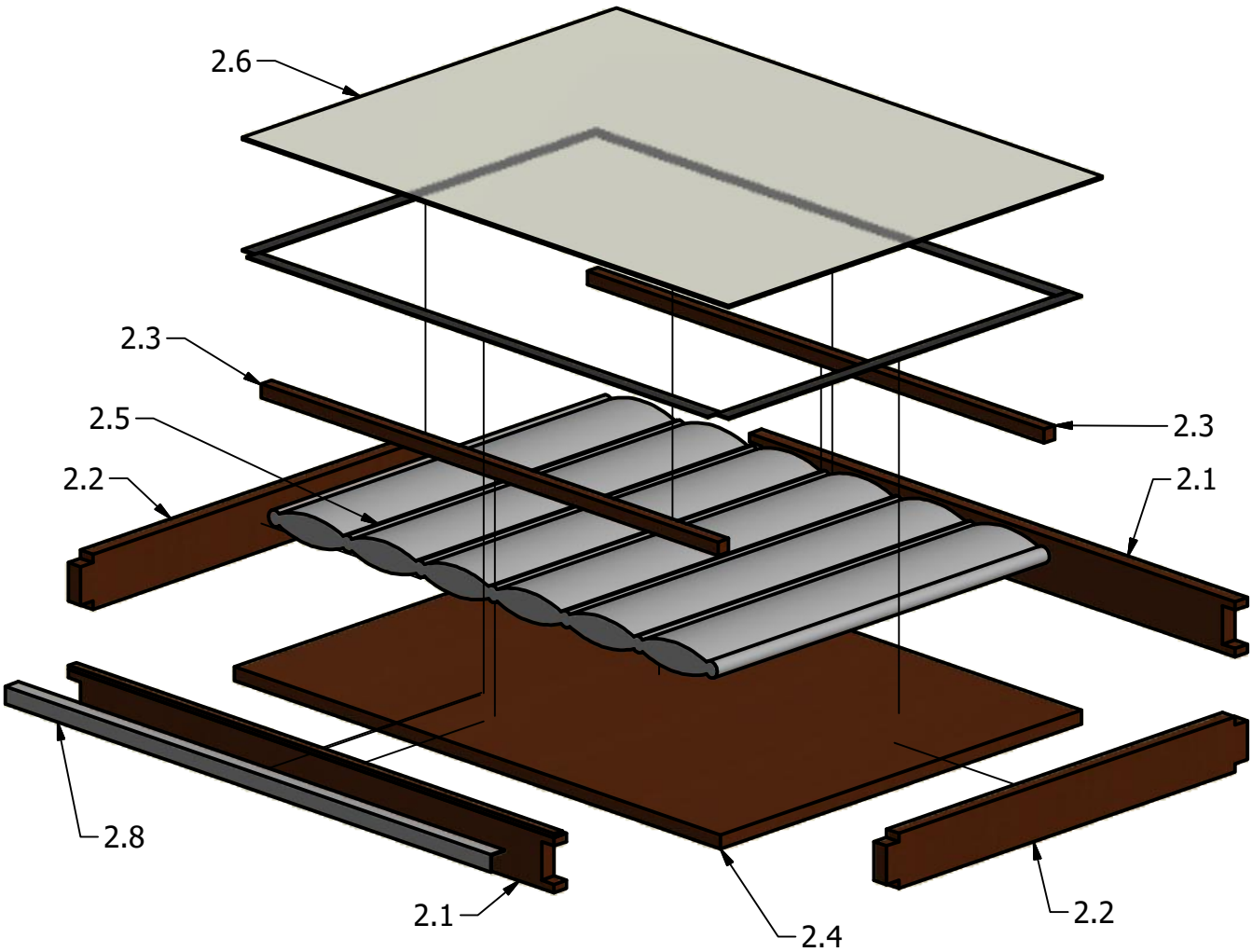

Proyect zigzag solar water heater		Created by D. Mosquera	Approved by D. Jeager		
Part Name collector box		Part Code 2	Document Type assembly	Material	
Redesigned by OPEN SOURCE ECOLOGY GERMANY	Original drawing from Practical ACTION	License CERN-OHL	File Name oseg_zswh_collector-box.iam	Version 1.0	Quantity 3
			Scale 1 /12	Sheet 13	Date 10.02.21

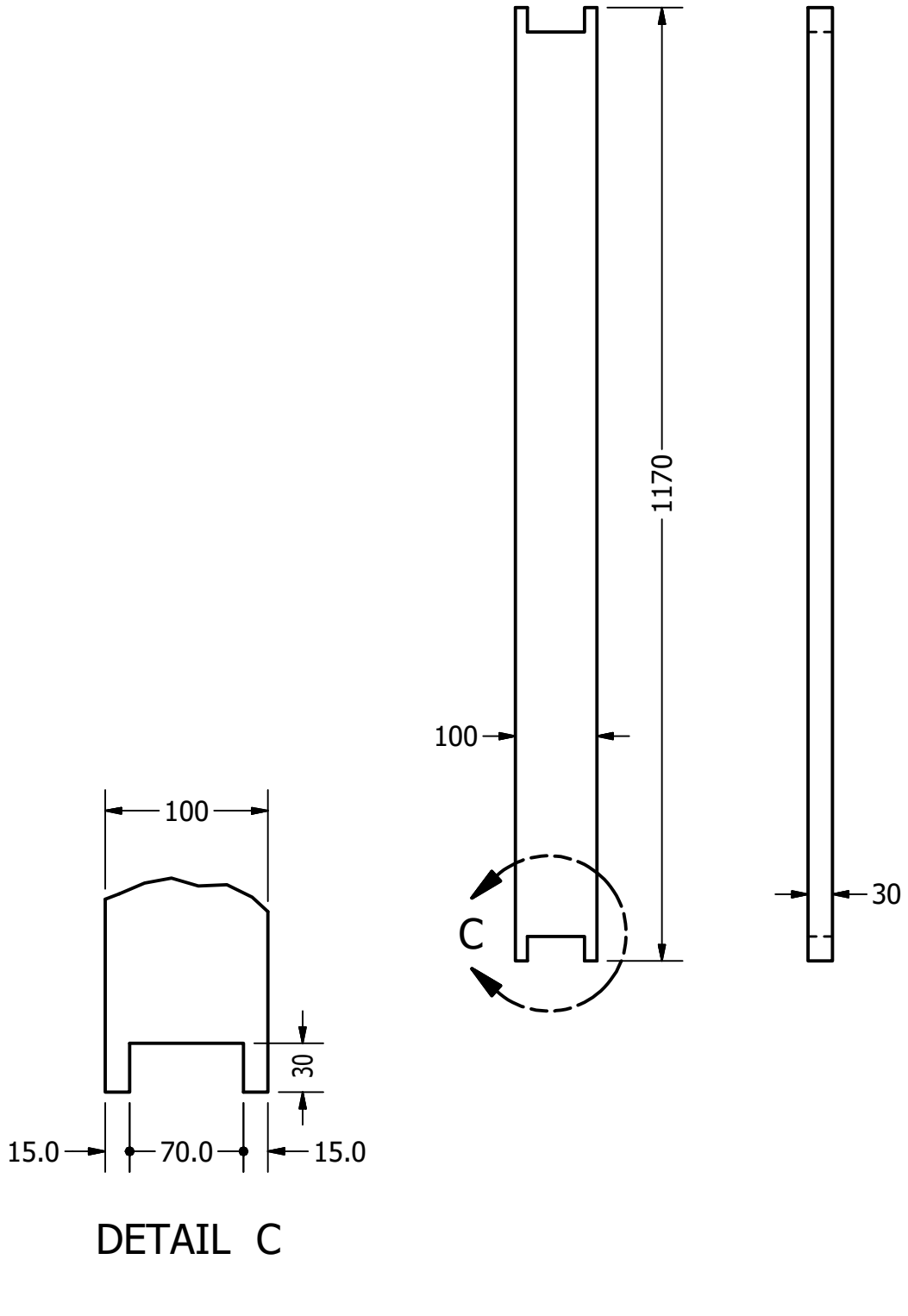

Proyect zigzag solar water heater		Created by D. Mosquera	Approved by D. Jeager		
Part Name sides planks		Part Code 2.1	Document Type part	Material	
Redesigned by OPEN SOURCE ECOLOGY GERMANY	Original drawing from Practical ACTION	License CERN-OHL	File Name oseg_zswh_sides-planks.ipt	Version 1.0	Quantity 6
			Scale 1 /8	Sheet 14	Date 10.02.21

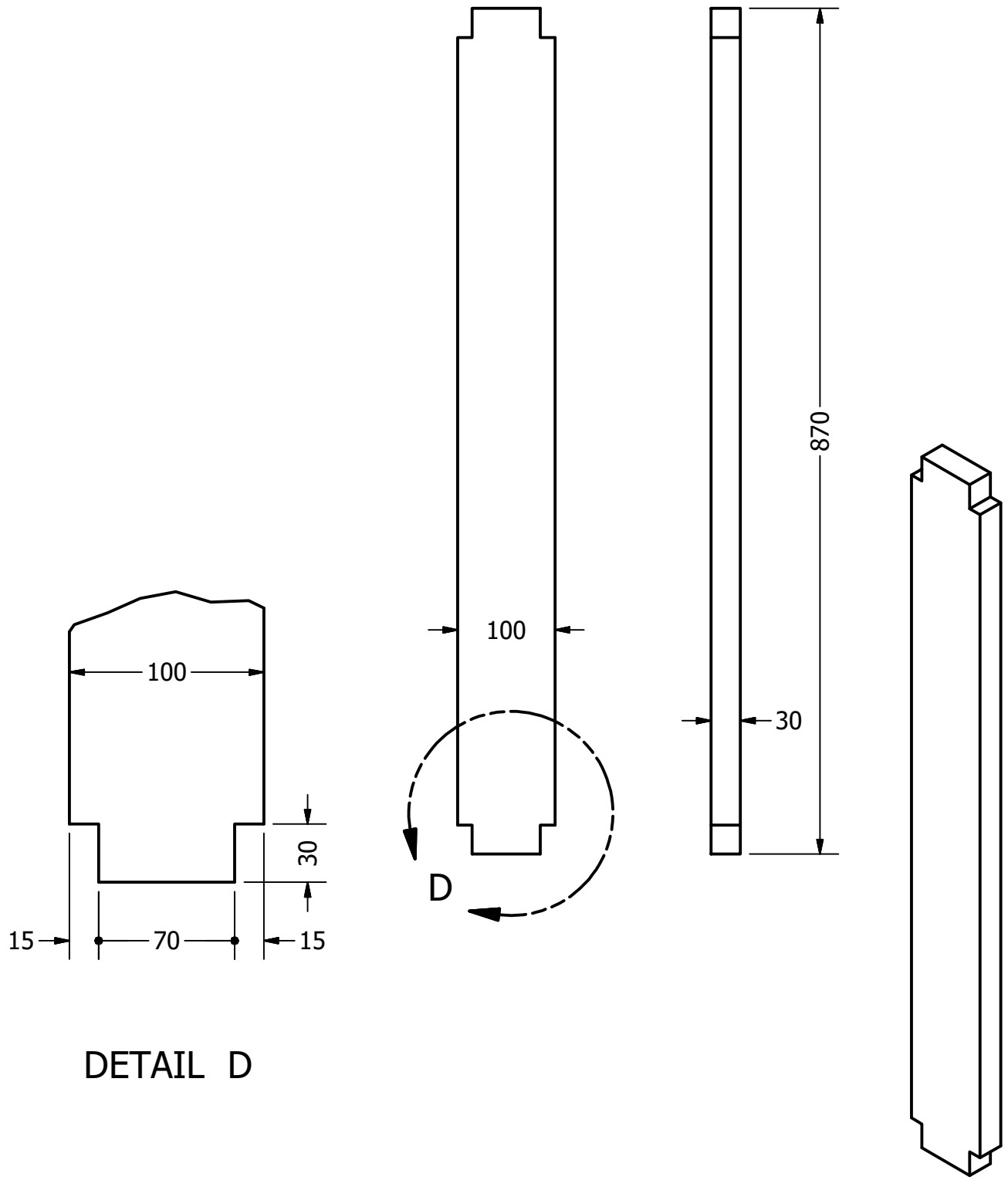

Proyect zigzag solar water heater		Created by D. Mosquera	Approved by D. Jeager		
Part Name front planks		Part Code 2.2	Document Type part	Material	
Redesigned by OPEN SOURCE ECOLOGY GERMANY	Original drawing from Practical ACTION	License CERN-OHL	File Name oseg_zswh_front-planks.ipt	Version 1.0	Quantity 6
			Scale 1 /6	Sheet 15	Date 10.02.21

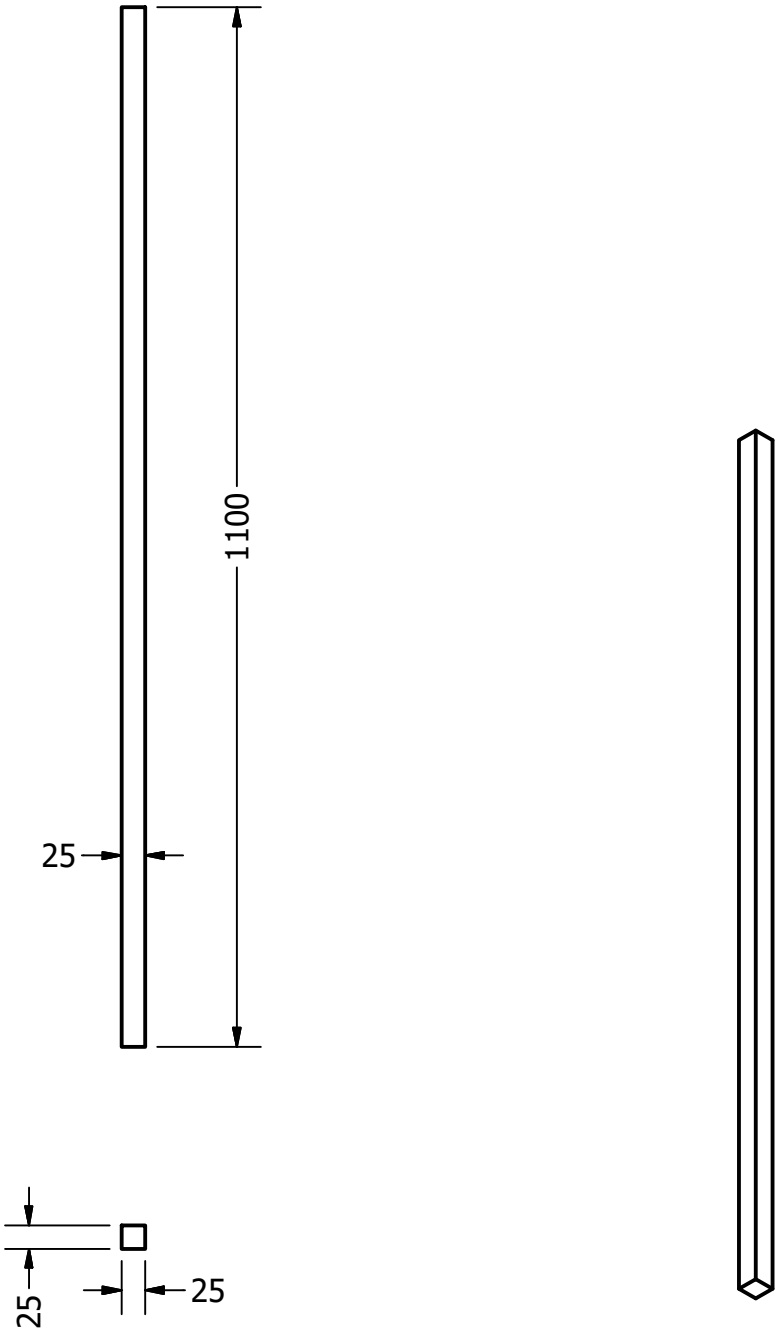

Proyect zigzag solar water heater		Created by D. Mosquera	Approved by D. Jeager		
Part Name sides planks		Part Code 2.3	Document Type part	Material	
Redesigned by OPEN SOURCE ECOLOGY GERMANY	Original drawing from Practical ACTION	License CERN-OHL	File Name oseg_zswh_supporting-laths.ipt	Version 1.0	Quantity 6
			Scale 1 /8	Sheet 16	Date 10.02.21

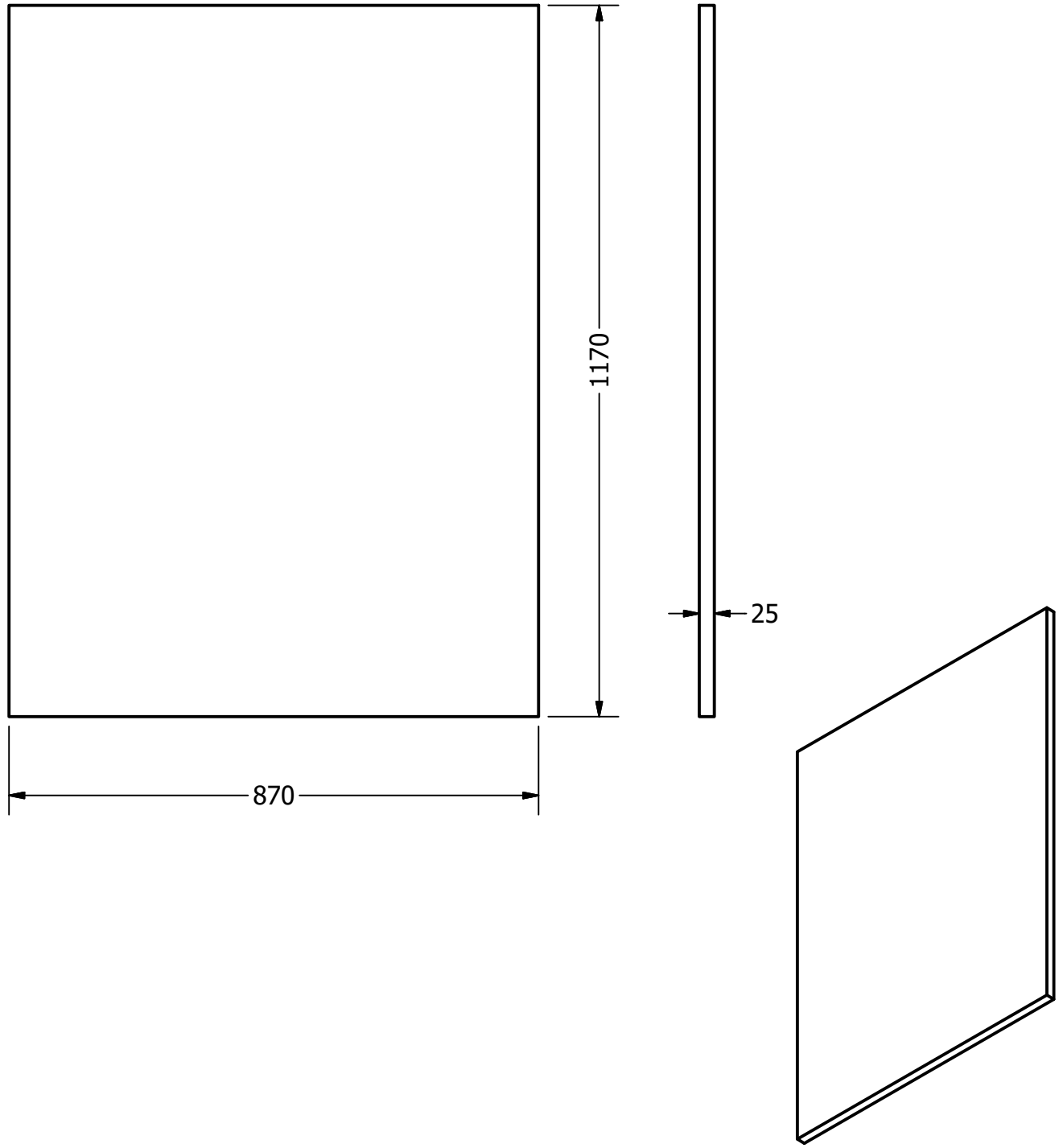

Proyect zigzag solar water heater		Created by D. Mosquera	Approved by D. Jeager		
Part Name bottom planks		Part Code 2.4	Document Type part	Material	
Redesigned by OPEN SOURCE ECOLOGY GERMANY	Original drawing from Practical ACTION	License CERN-OHL	File Name oseg_zswh_bottom-plank.ipt	Version 1.0	Quantity 3
			Scale 1 /10	Sheet 17	Date 10.02.21

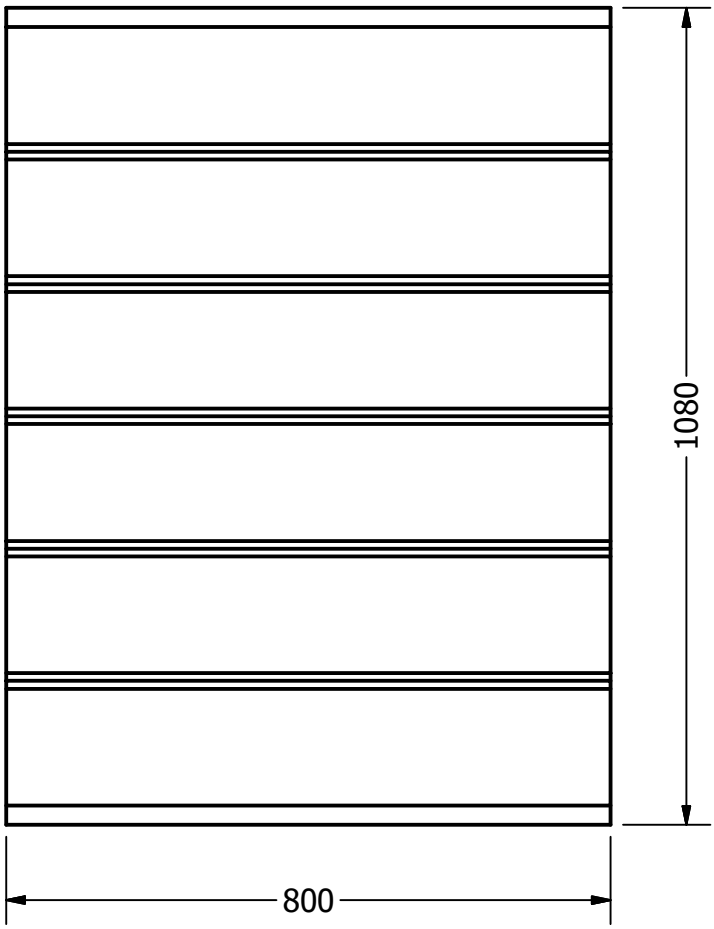

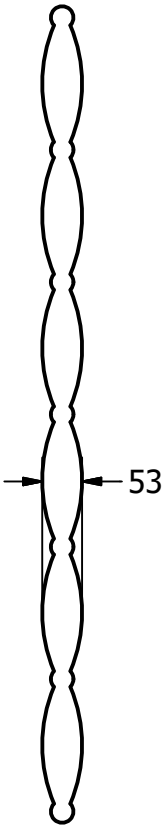

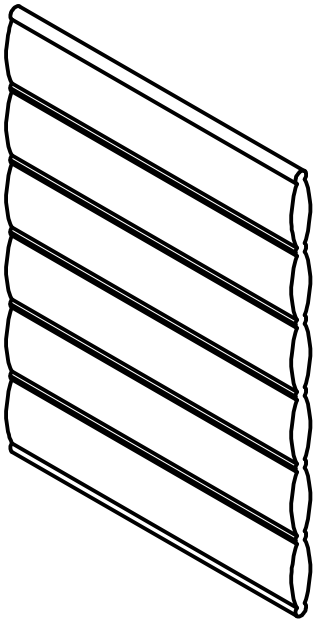

NOTE: empty bags of fibre with sawdust, Coconut-fibre, glass-wool or any kind of other insulating material.

Proyect zigzag solar water heater		Created by D. Mosquera	Approved by D. Jeager		
Part Name sides planks		Part Code 2.5	Document Type part	Material	
Redesigned by OPEN SOURCE ECOLOGY GERMANY	Original drawing from Practical ACTION	License CERN-OHL	File Name oseg_zswh_insulating-material.ipt	Version 1.0	Quantity 3
			Scale 1 /10	Sheet 18	Date 10.02.21

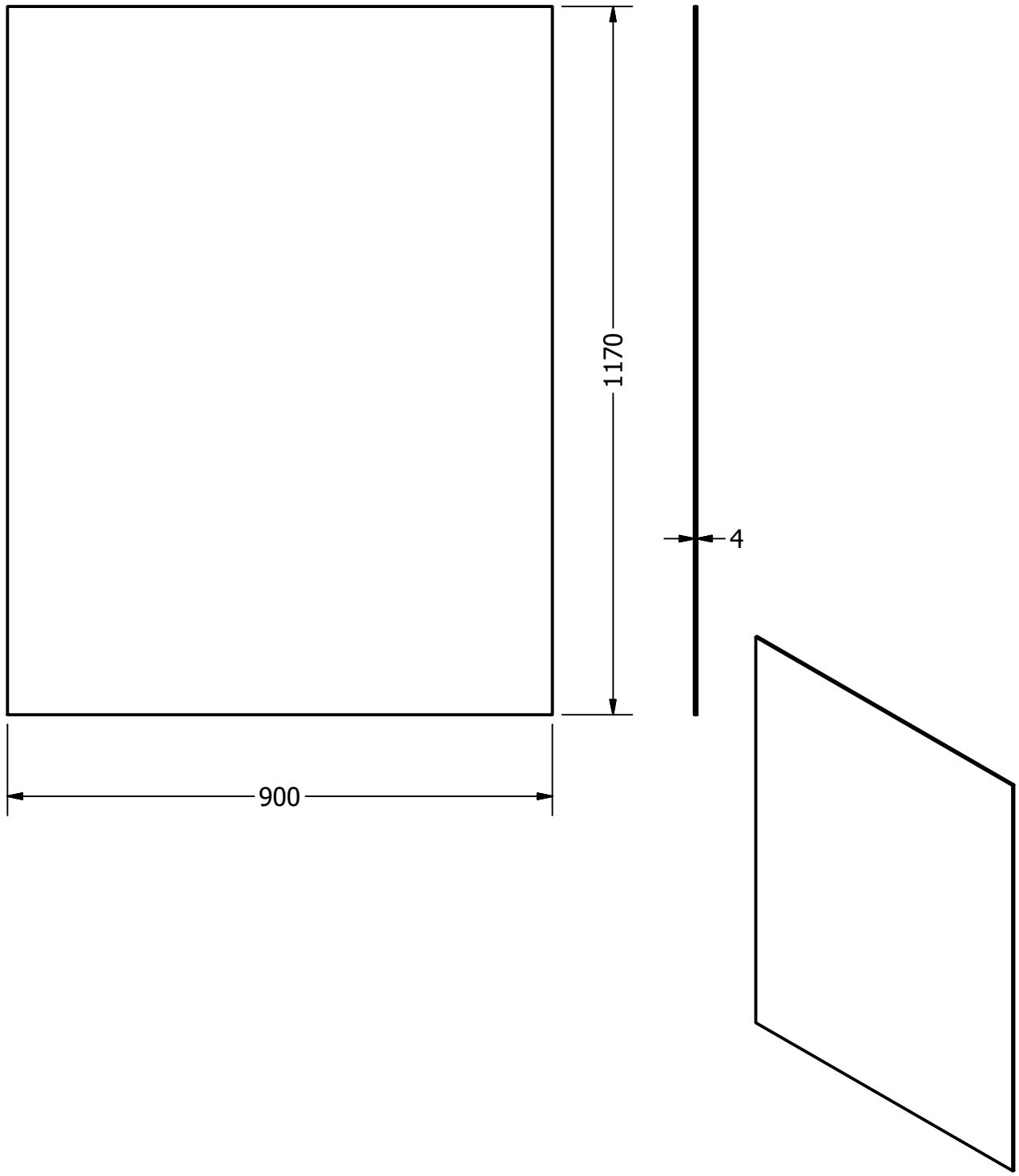

Proyect zigzag solar water heater		Created by D. Mosquera	Approved by D. Jeager		
Part Name cover glass		Part Code 2.6	Document Type part	Material	
Redesigned by OPEN SOURCE ECOLOGY GERMANY	Original drawing from Practical ACTION	License CERN-OHL	File Name oseg_zswh_cover-glass.ipt	Version 1.0	Quantity 3
			Scale 1 /10	Sheet 19	Date 10.02.21

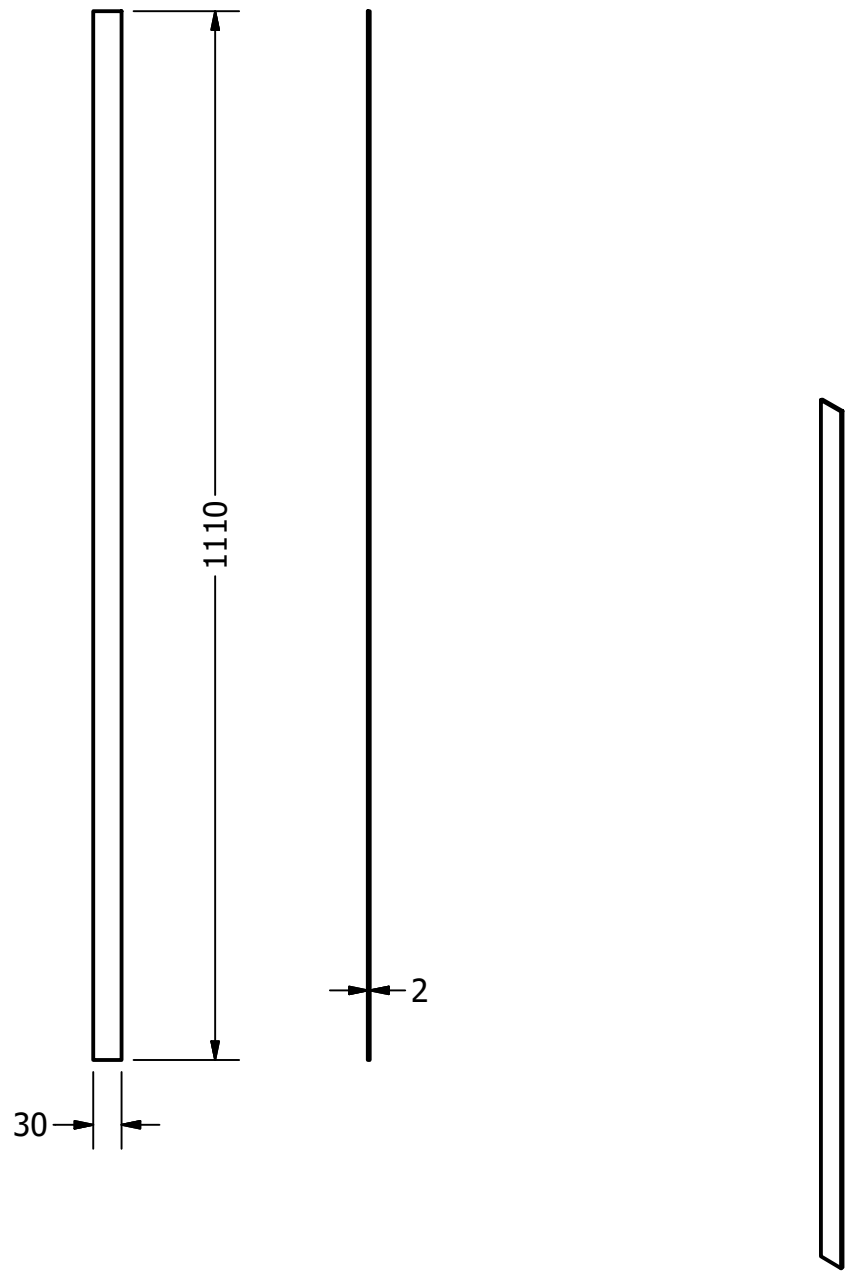

Proyect zigzag solar water heater		Created by D. Mosquera	Approved by D. Jeager		
Part Name rubber strip		Part Code 2.7	Document Type part	Material	
Redesigned by OPEN SOURCE ECOLOGY GERMANY	Original drawing from Practical ACTION	License CERN-OHL	File Name oseg_zswh_rubber-strip.ipt	Version 1.0	Quantity 12
			Scale 1 /8	Sheet 20	Date 10.02.21

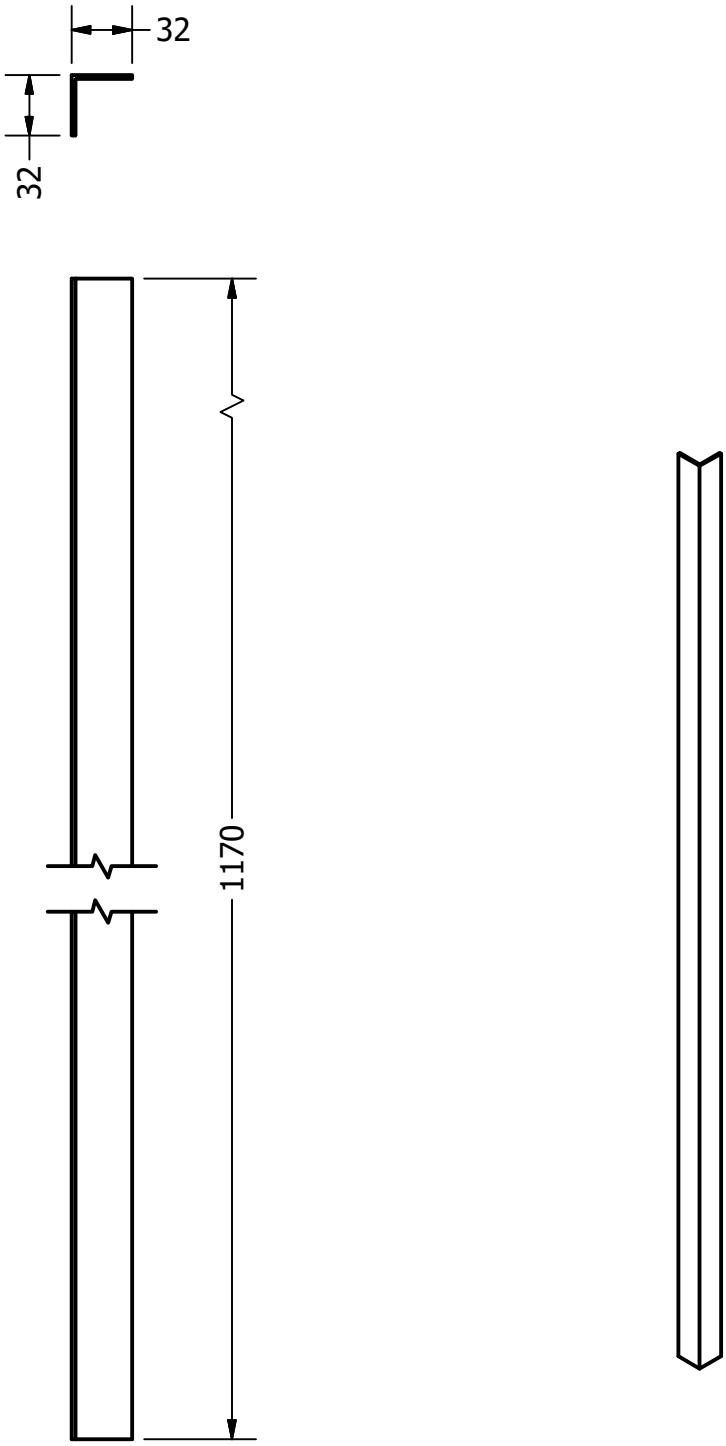

Proyect zigzag solar water heater		Created by D. Mosquera	Approved by D. Jeager		
Part Name angles section		Part Code 2.8	Document Type part	Material	
Redesigned by OPEN SOURCE ECOLOGY GERMANY	Original drawing from Practical ACTION	License CERN-OHL	File Name oseg_zswh_angle-section.ipt	Version 1.0	Quantity 3
			Scale 1 / 4	Sheet 21	Date 10.02.21

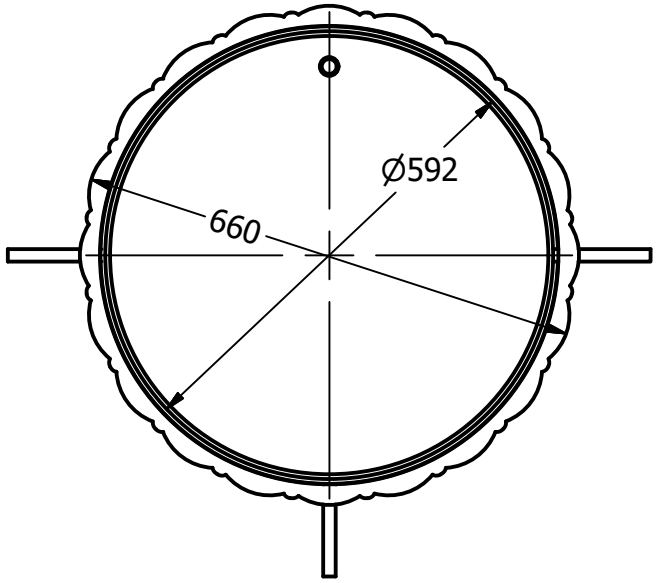

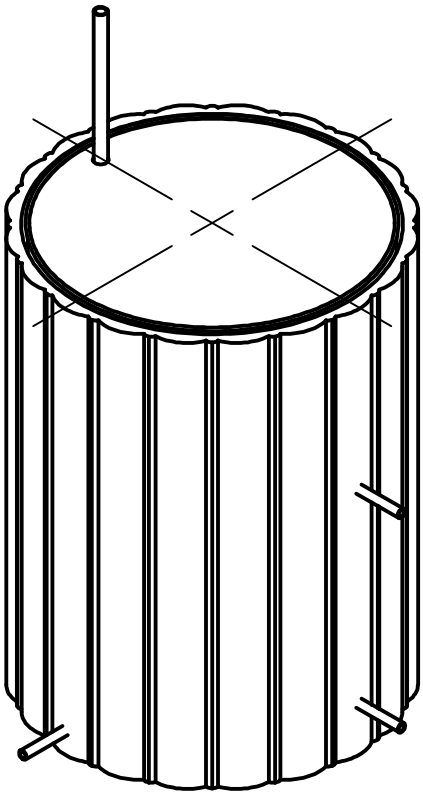

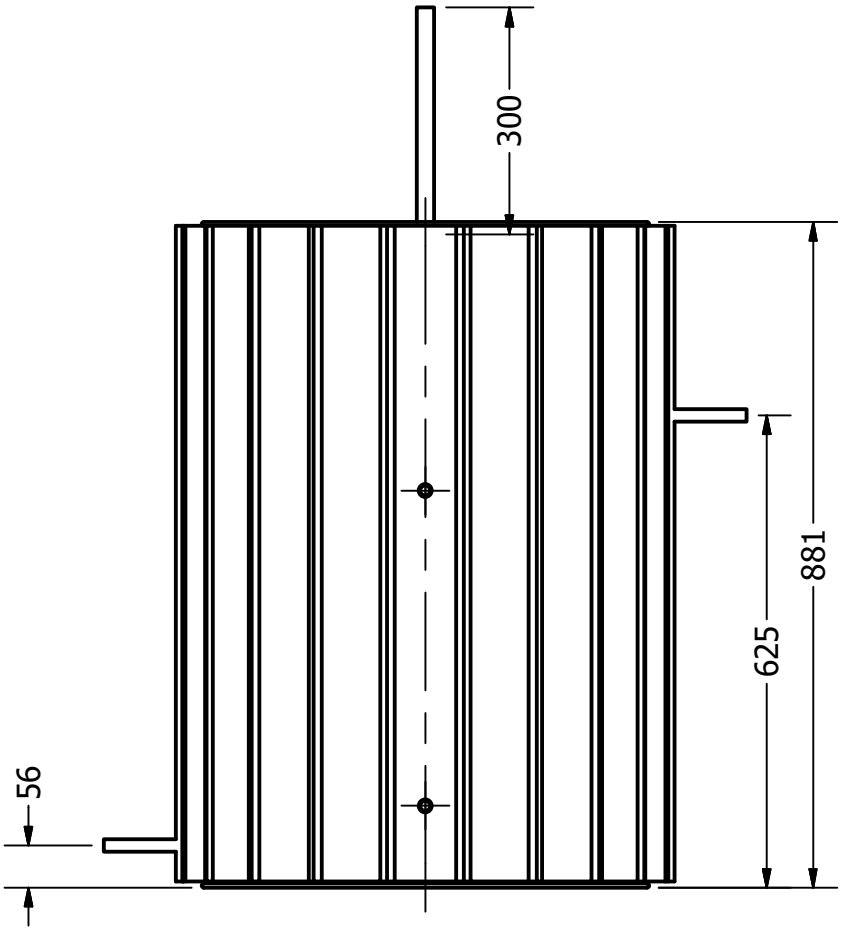

Proyect zigzag solar water heater		Created by D. Mosquera	Approved by D. Jeager		
Part Name insulated storage tank		Part Code 3	Document Type assembly	Material	
Redesigned by OPEN SOURCE ECOLOGY GERMANY	Original drawing from Practical ACTION	License CERN-OHL	File Name oseg_zswh_insulated-storage-tank.iam	Version 1.0	Quantity 3
			Scale 1 / 10	Sheet 22	Date 10.02.21

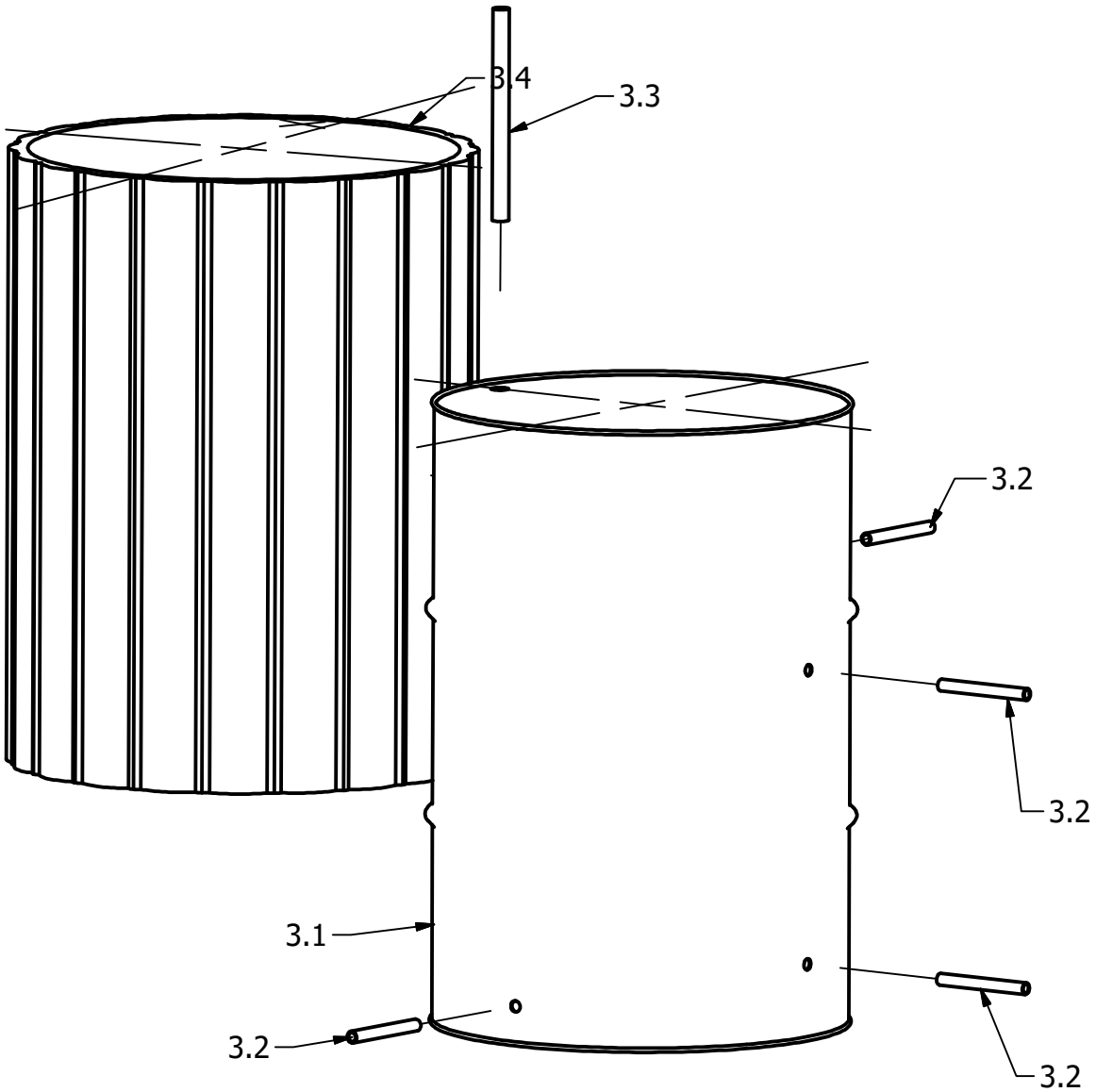

Proyect zigzag solar water heater		Created by D. Mosquera	Approved by D. Jeager		
Part Name storage tank		Part Code 3	Document Type assembly	Material	
Redesigned by OPEN SOURCE ECOLOGY GERMANY	Original drawing from Practical ACTION	License CERN-OHL	File Name oseg_zswh_insulated-storage-tank.iam	Version 1.0	Quantity 3
			Scale 1 / 10	Sheet 23	Date 10.02.21

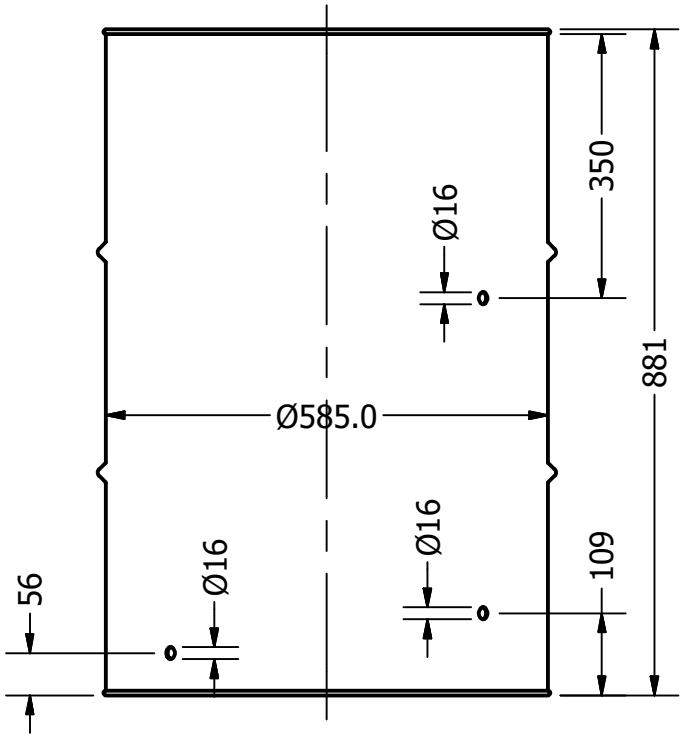

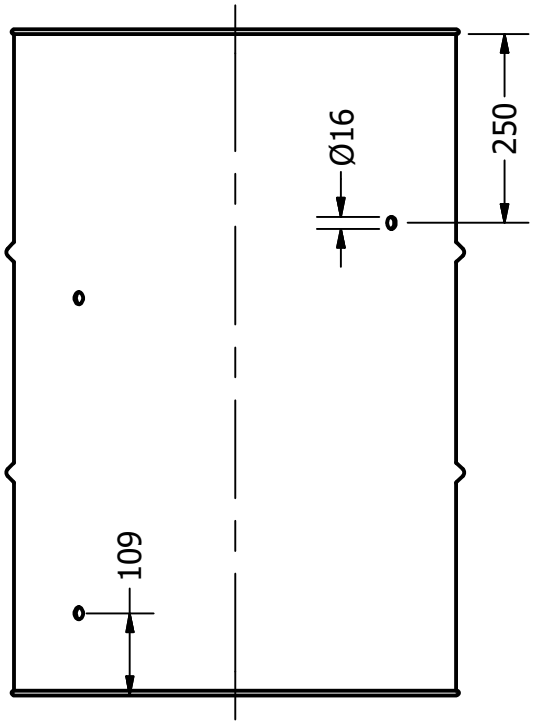

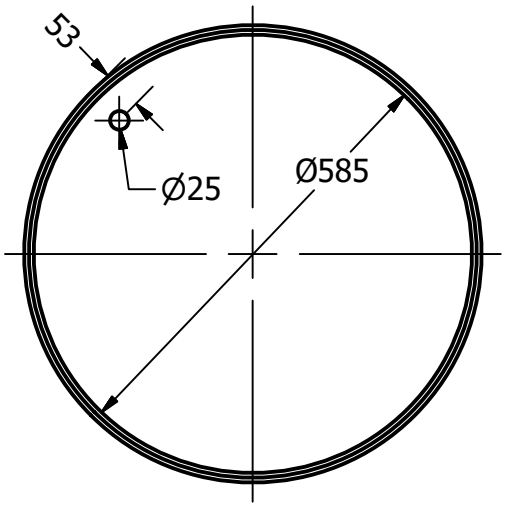

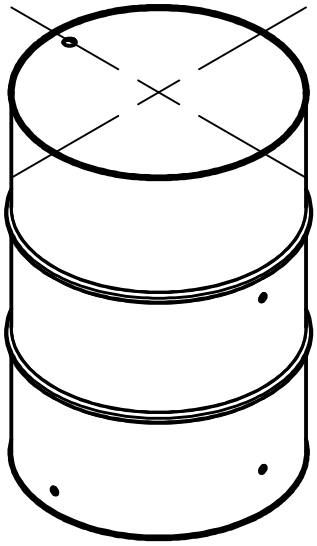

Proyect zigzag solar water heater		Created by D. Mosquera	Approved by D. Jeager		
Part Name storage tank		Part Code 3.1	Document Type part	Material	
Redesigned by OPEN SOURCE ECOLOGY GERMANY	Original drawing from Practical ACTION	License CERN-OHL	File Name oseg_zswh_storage-tank.ipt	Version 1.0	Quantity 1
			Scale 1 / 10	Sheet 24	Date 10.02.21

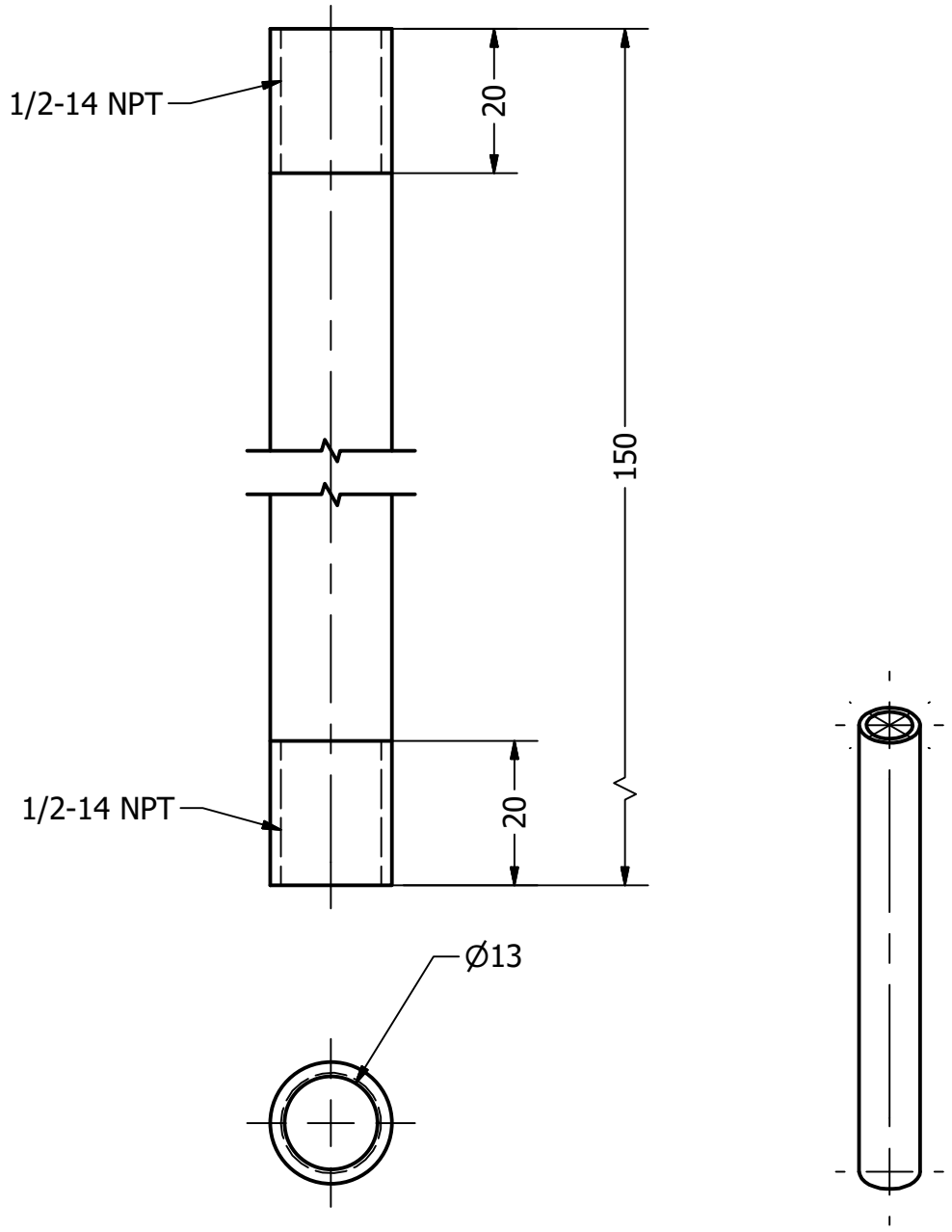

Proyect zigzag solar water heater		Created by D. Mosquera	Approved by D. Jeager		
Part Name galvanised pipe 1/2"		Part Code 2.8	Document Type part	Material	
Redesigned by OPEN SOURCE ECOLOGY GERMANY	Original drawing from Practical ACTION	License CERN-OHL	File Name oseg_zswh_galvanised-pipe-1-2plgx150.ipt	Version 1.0	Quantity 4
			Scale 1 : 1	Sheet 25	Date 10.02.21

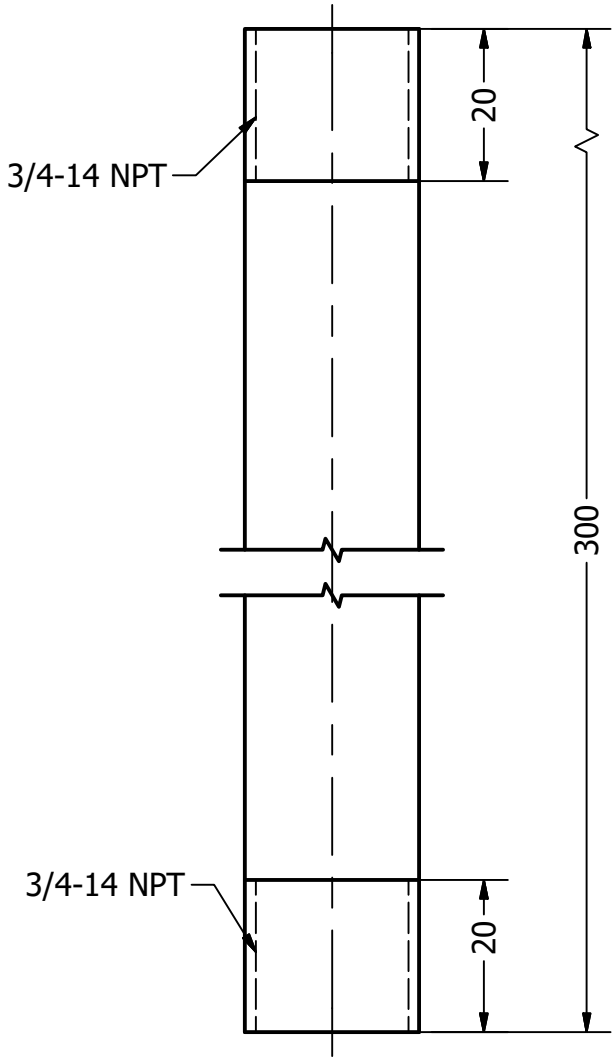

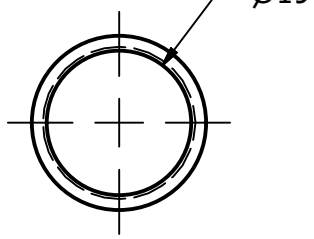

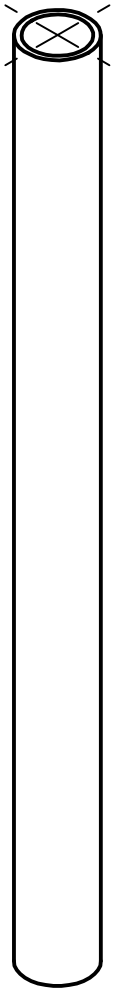

Proyect zigzag solar water heater		Created by D. Mosquera	Approved by D. Jeager		
Part Name galvanised pipe 3/4"		Part Code 3.3	Document Type part	Material	
Redesigned by OPEN SOURCE ECOLOGY GERMANY	Original drawing from Practical ACTION	License CERN-OHL	File Name oseg_zswh_galvanised-pipe-3-4plgx300.ipt	Version 1.0	Quantity 1
			Scale 1 : 1	Sheet 26	Date 10.02.21

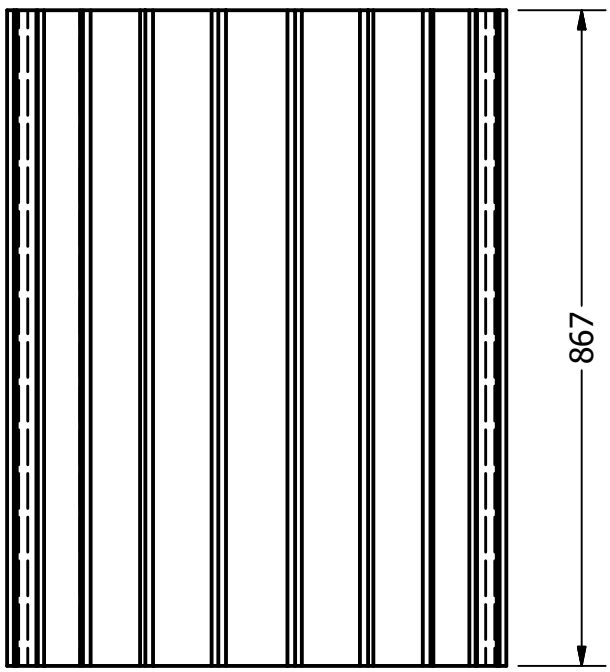

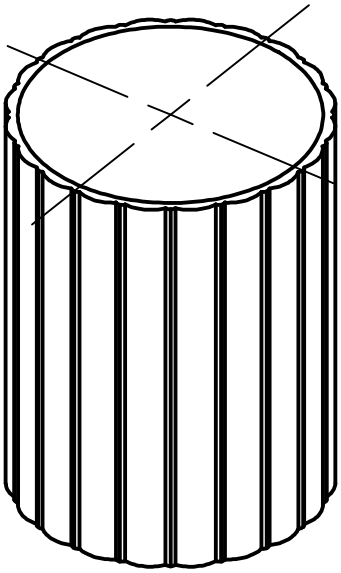

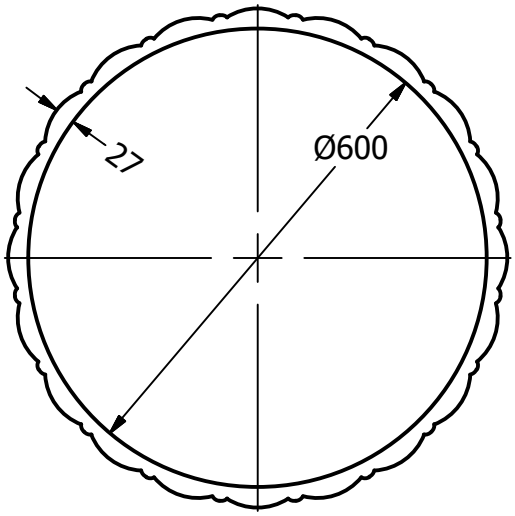

NOTE: empty bags of fibre with sawdust, Coconut-fibre, glass-wool or any kind of other insulating material.

Proyect zigzag solar water heater	Created by D. Mosquera	Approved by D. Jeager		
Part Name insulating material	Part Code 3.4	Document Type part	Material	
Redesigned by OPEN SOURCE ECOLOGY GERMANY / Original drawing from Practical ACTION	License CERN-OHL	File Name oseg_zswh_insulating-material2.ipt	Version 1.0	Quantity 1
		Scale 1 / 10	Sheet 27	Date 10.02.21

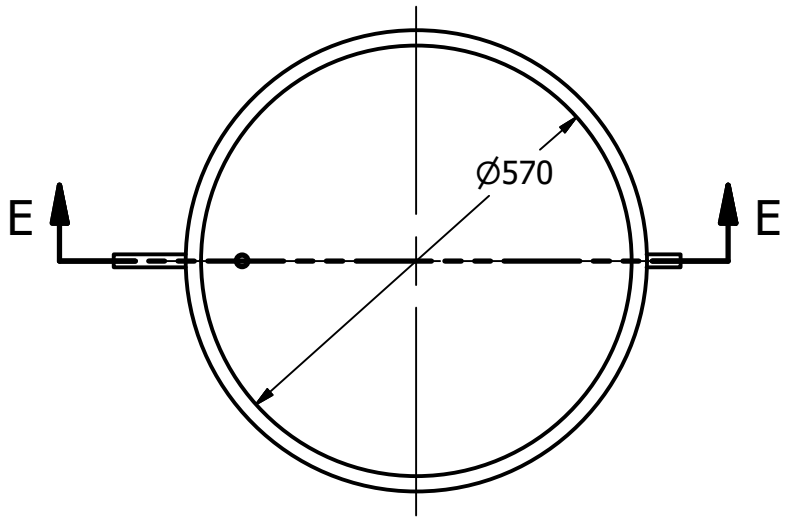

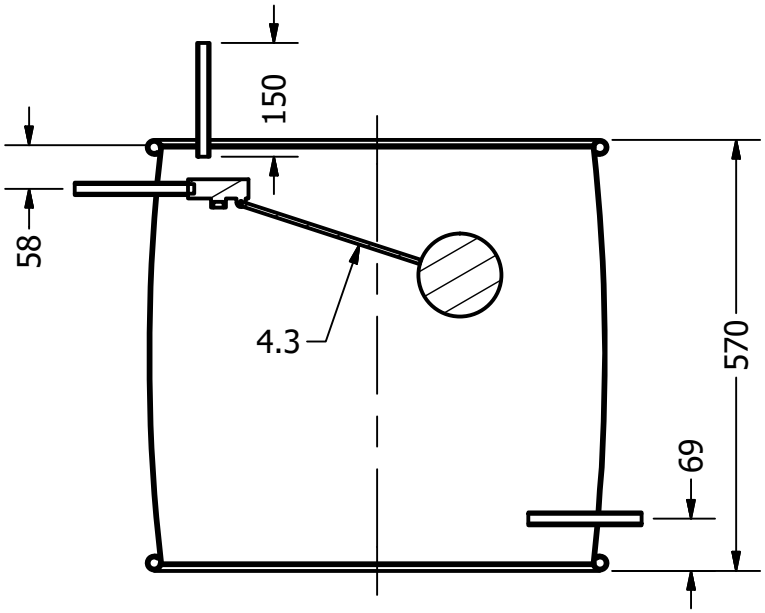

SECTION E-E

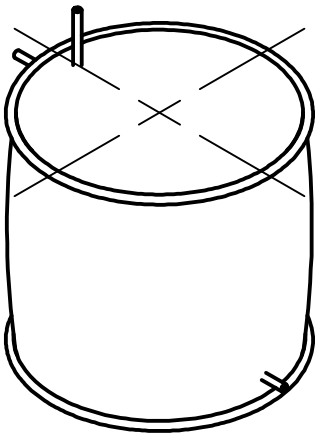

Proyect zigzag solar water heater		Created by D. Mosquera	Approved by D. Jeager		
Part Name the buffer tank		Part Code 4	Document Type assembly	Material	
Redesigned by OPEN SOURCE ECOLOGY GERMANY	Original drawing from Practical ACTION	License CERN-OHL	File Name oseg_zswh_the-buffer-tank.iam	Version 1.0	Quantity 1
			Scale 1 / 10	Sheet 28	Date 10.02.21

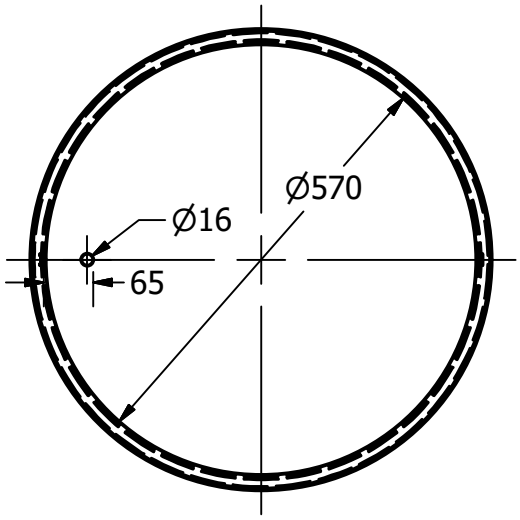

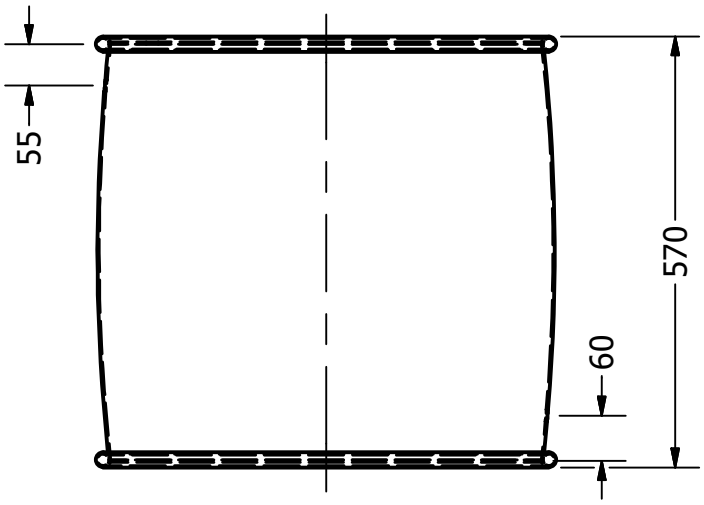

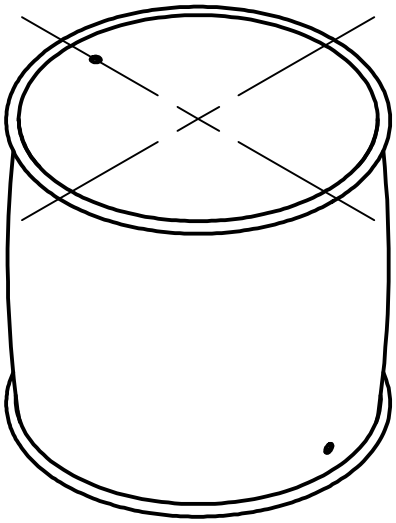

Proyect zigzag solar water heater		Created by D. Mosquera	Approved by D. Jeager		
Part Name storage tank		Part Code 4.1	Document Type part	Material	
Redesigned by OPEN SOURCE ECOLOGY GERMANY	Original drawing from Practical ACTION	License CERN-OHL	File Name oseg_zswh_storage-tank.ipt	Version 1.0	Quantity 1
			Scale 1 / 10	Sheet 29	Date 10.02.21

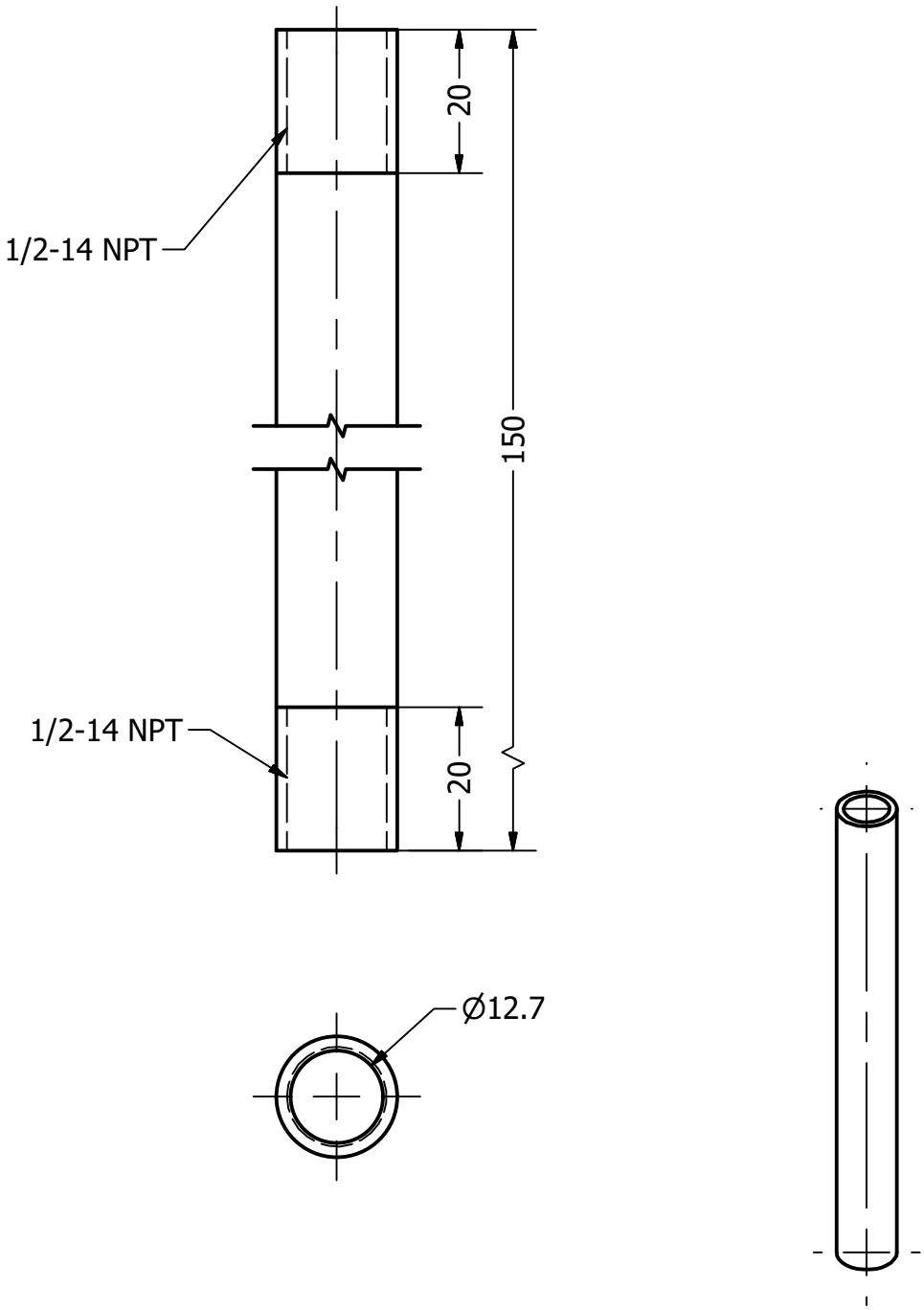

Proyect zigzag solar water heater		Created by D. Mosquera	Approved by D. Jeager		
Part Name galvanised pipe 1/2"		Part Code 4.2	Document Type part	Material	
Redesigned by OPEN SOURCE ECOLOGY GERMANY	Original drawing from Practical ACTION	License CERN-OHL	File Name oseg_zswh_galvanised-pipe-1-2plgx150.ipt	Version 1.0	Quantity 4
			Scale 1 : 1	Sheet 30	Date 10.02.21

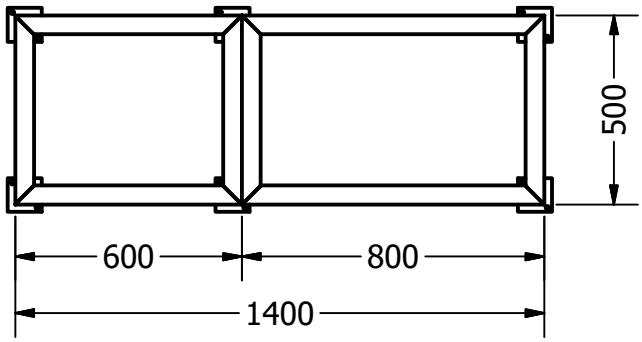

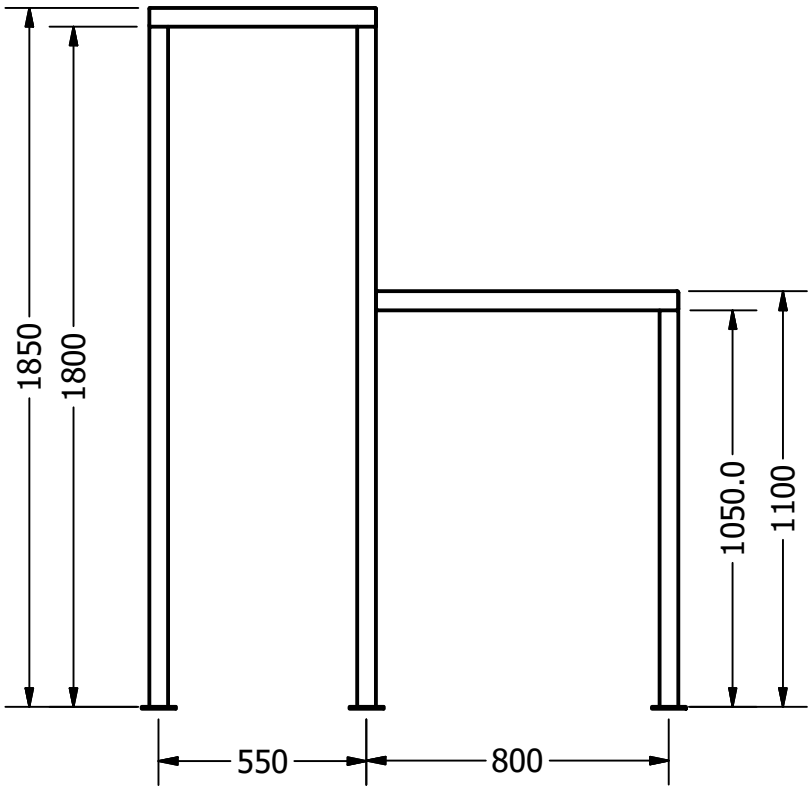

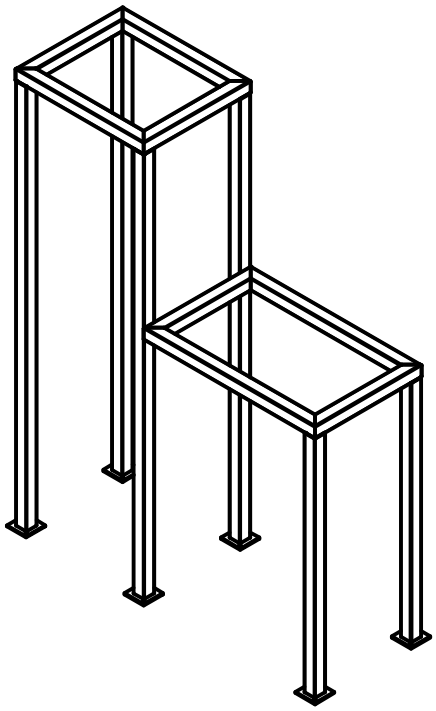

Proyect zigzag solar water heater		Created by D. Mosquera	Approved by D. Jeager		
Part Name foundation storage tank		Part Code 5	Document Type assembly	Material	
Redesigned by OPEN SOURCE ECOLOGY GERMANY	Original drawing from Practical ACTION	License CERN-OHL	File Name oseg_zswh_foundation-structure.iam	Version 1.0	Quantity 1
			Scale 1 / 20	Sheet 31	Date 10.02.21

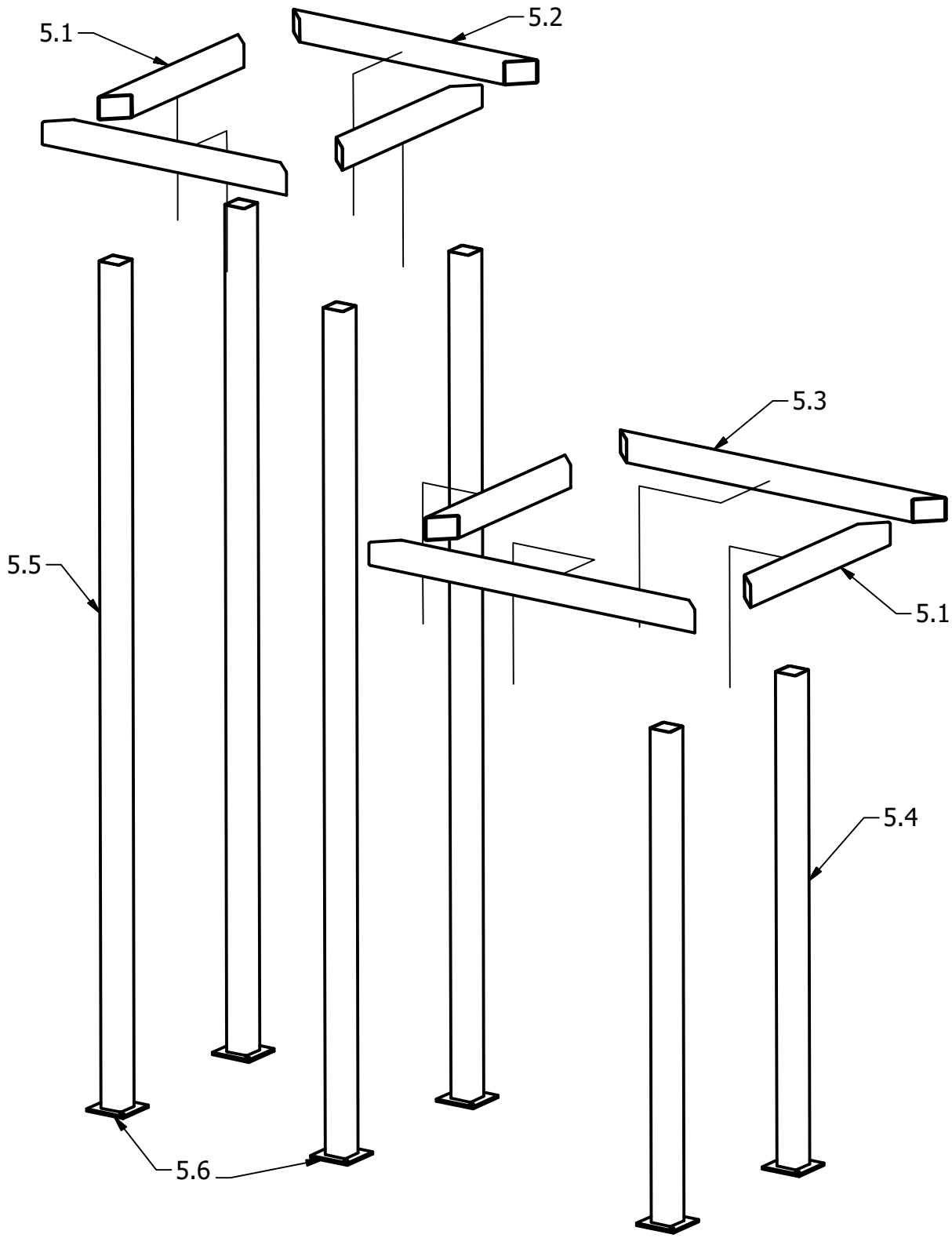

Proyect zigzag solar water heater		Created by D. Mosquera	Approved by D. Jeager		
Part Name foundation storage tank		Part Code 5	Document Type assembly	Material	
Redesigned by OPEN SOURCE ECOLOGY GERMANY	Original drawing from Practical ACTION	License CERN-OHL	File Name oseg_zswh_foundation-structure.iam	Version 1.0	Quantity 1
			Scale 1 / 12	Sheet 32	Date 10.02.21

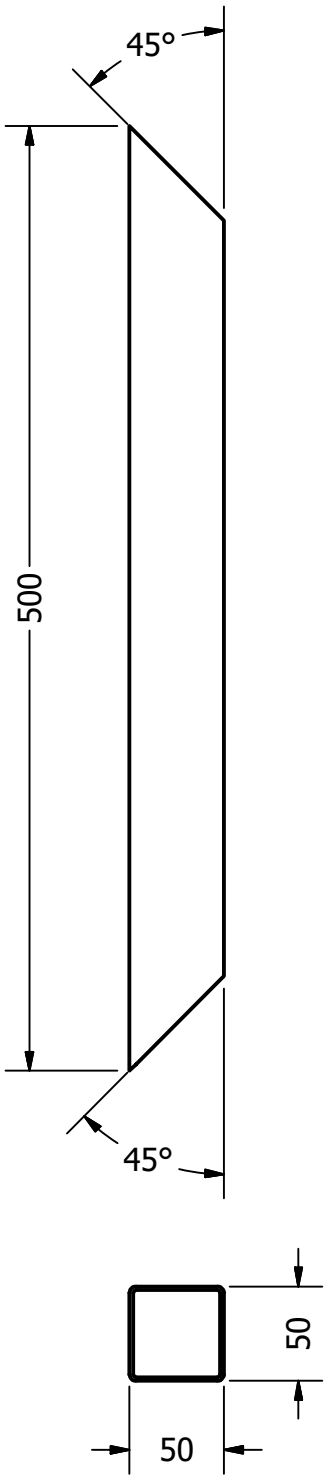

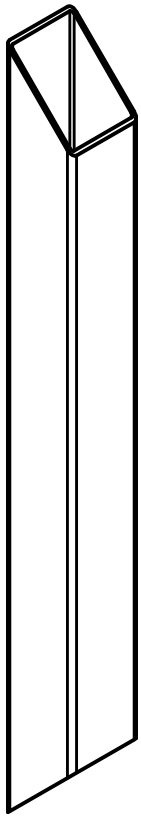

Proyect zigzag solar water heater		Created by D. Mosquera	Approved by D. Jeager		
Part Name steel pipe 50x50x500		Part Code 5.1	Document Type part	Material	
Redesigned by OPEN SOURCE ECOLOGY GERMANY	Original drawing from Practical ACTION	License CERN-OHL	File Name cseg_zswh_steel-pipe 50x50x500.ipt	Version 1.0	Quantity 4
			Scale 1 / 4	Sheet 33	Date 10.02.21

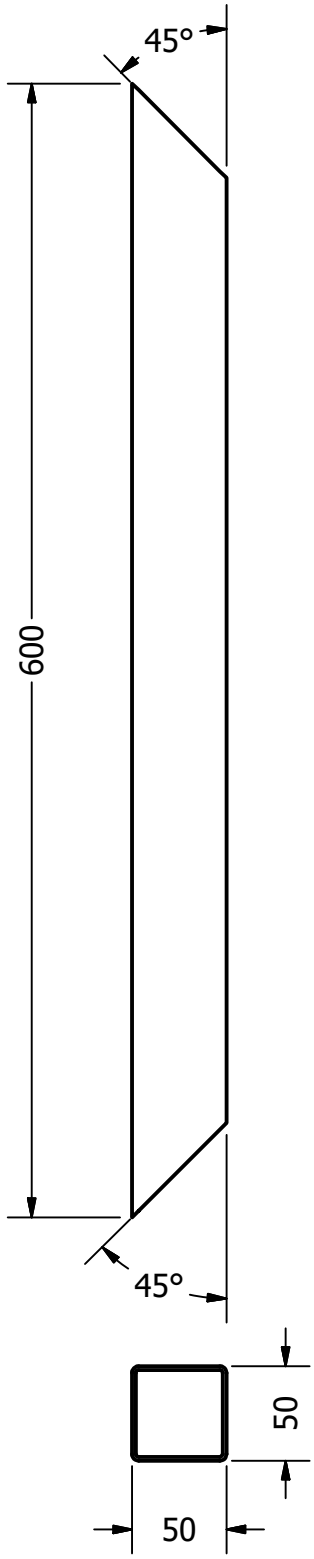

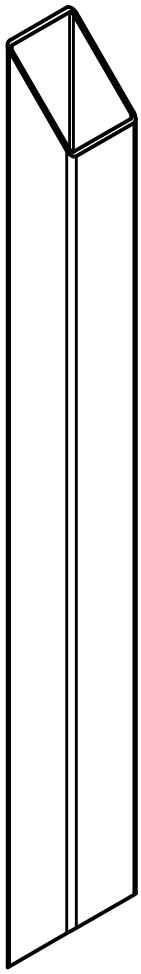

Proyect zigzag solar water heater		Created by D. Mosquera	Approved by D. Jeager		
Part Name steel pipe 50x50x600		Part Code 5.2	Document Type part	Material	
Redesigned by OPEN SOURCE ECOLOGY GERMANY	Original drawing from Practical ACTION	License CERN-OHL	File Name oseg_zswh_steel-pipe 50x50x600.ipt	Version 1.0	Quantity 4
			Scale 1 / 4	Sheet 34	Date 10.02.21

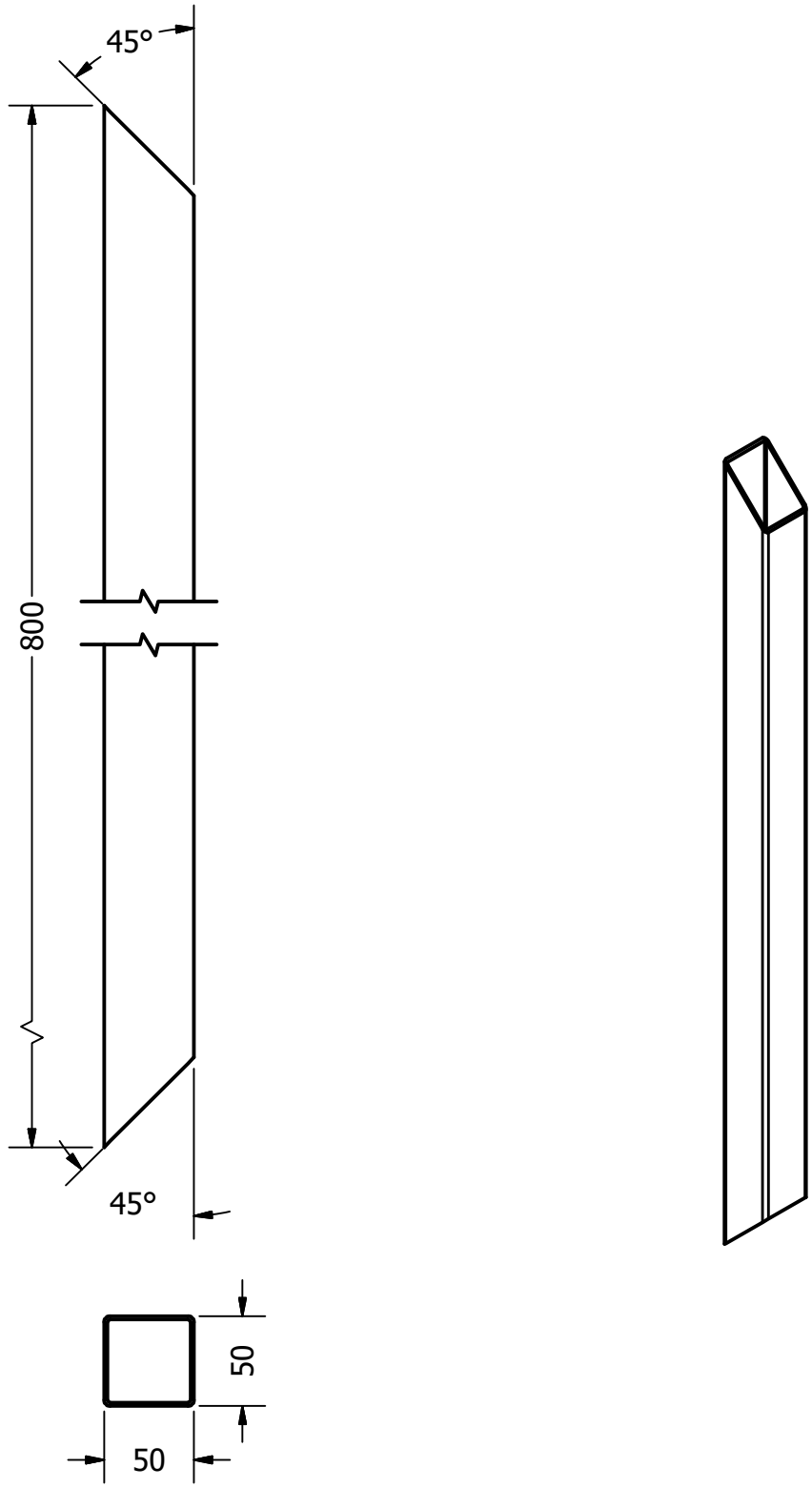

Proyect zigzag solar water heater		Created by D. Mosquera	Approved by D. Jeager		
Part Name steel pipe 50x50x800		Part Code 5.3	Document Type part	Material	
Redesigned by OPEN SOURCE ECOLOGY GERMANY	Original drawing from Practical ACTION	License CERN-OHL	File Name oseg_zswh_steel-pipe 50x50x800.ipt	Version 1.0	Quantity 4
			Scale 1 / 4	Sheet 35	Date 10.02.21

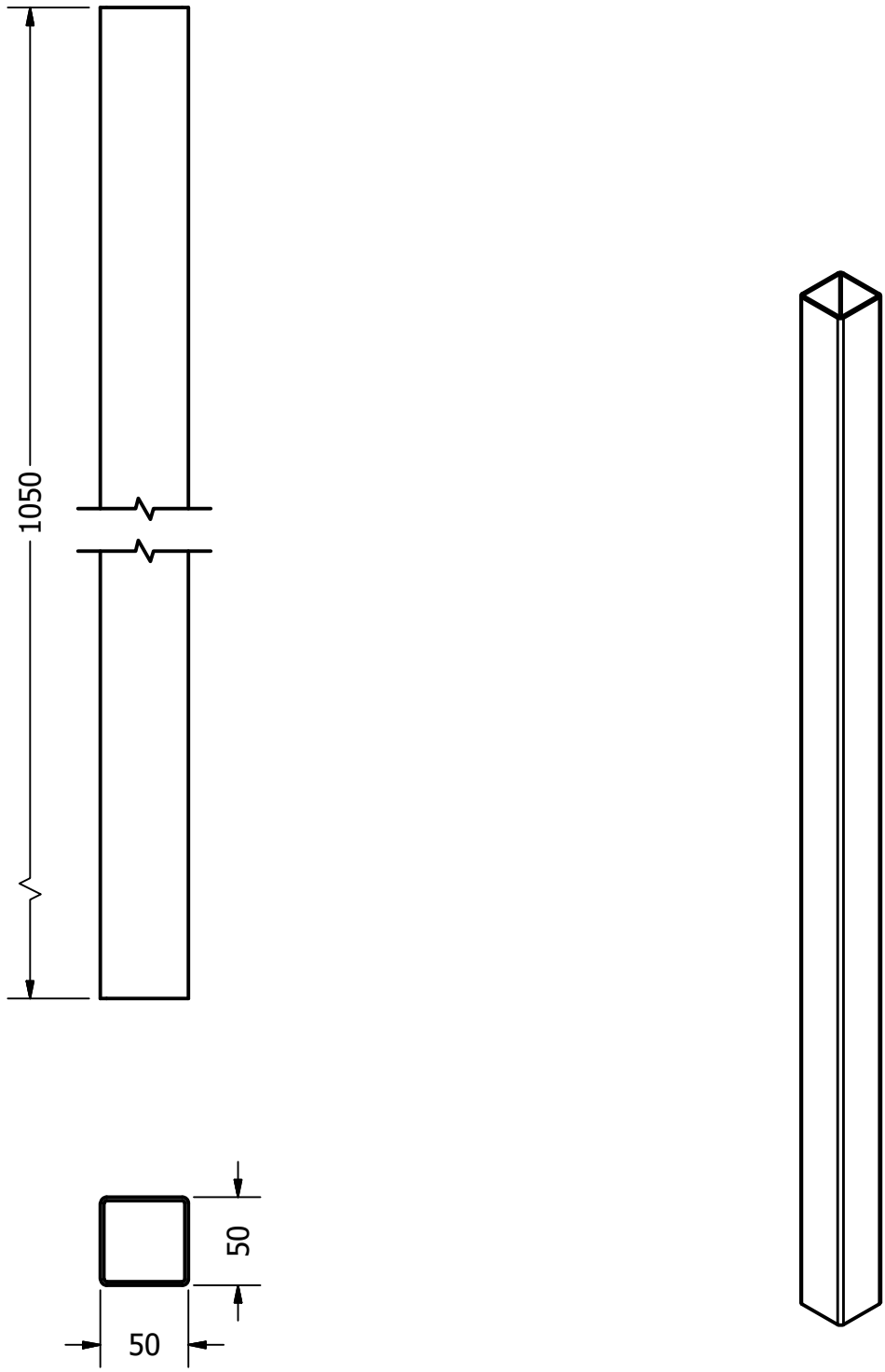

Proyect zigzag solar water heater		Created by D. Mosquera	Approved by D. Jeager		
Part Name steel pipe 50x50x1050		Part Code 5.4	Document Type part	Material	
Redesigned by OPEN SOURCE ECOLOGY GERMANY	Original drawing from Practical ACTION	License CERN-OHL	File Name oseg_zswh_steel-pipe 50x50x1050.ipt	Version 1.0	Quantity 4
			Scale 1 / 4	Sheet 36	Date 10.02.21

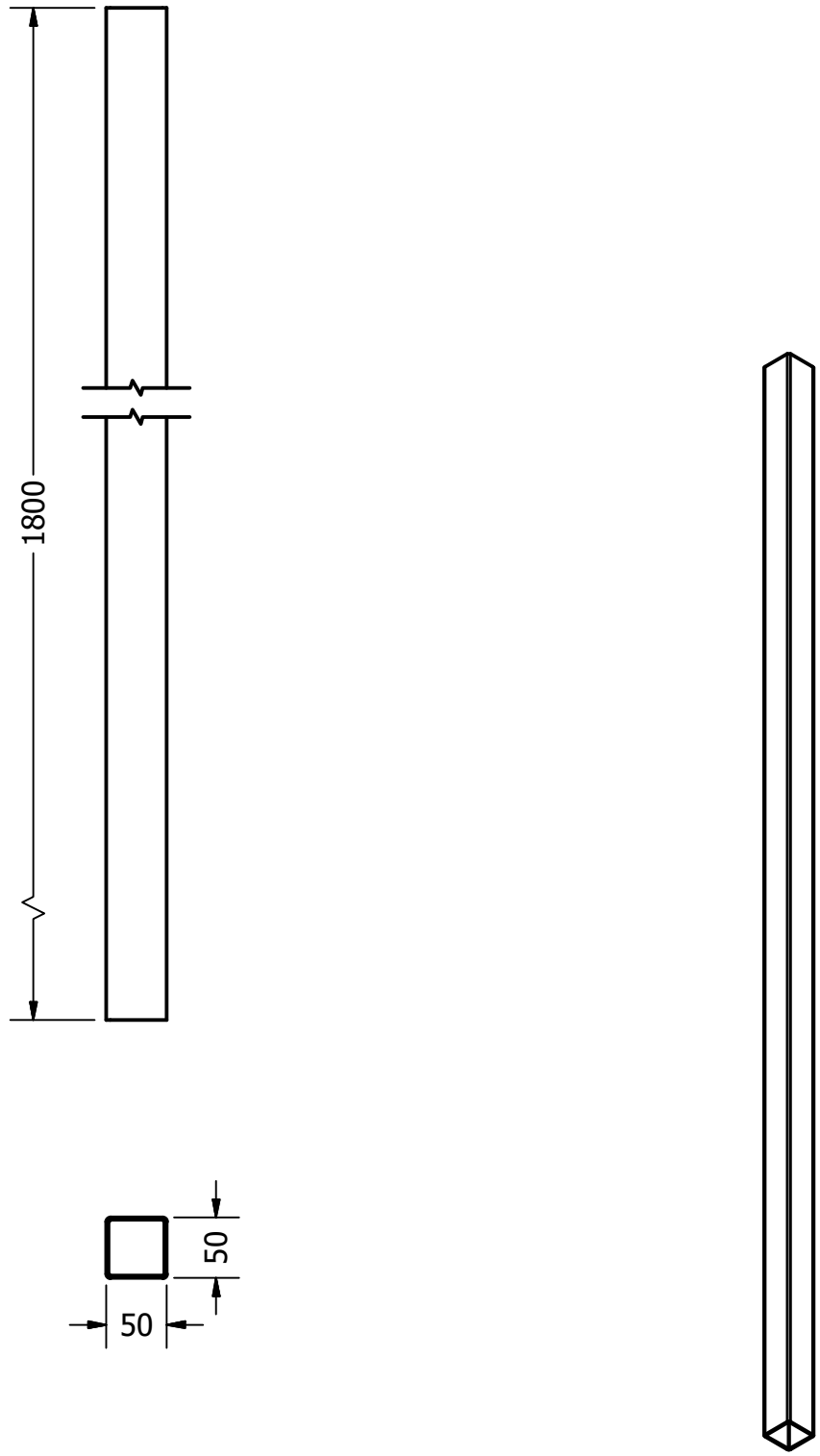

Proyect zigzag solar water heater		Created by D. Mosquera	Approved by D. Jeager		
Part Name steel pipe 50x50x1800		Part Code 5.5	Document Type part	Material	
Redesigned by OPEN SOURCE ECOLOGY GERMANY	Original drawing from Practical ACTION	License CERN-OHL	File Name oseg_zswh_steel-pipe 50x50x1800.ipt	Version 1.0	Quantity 4
			Scale 1 / 6	Sheet 37	Date 10.02.21

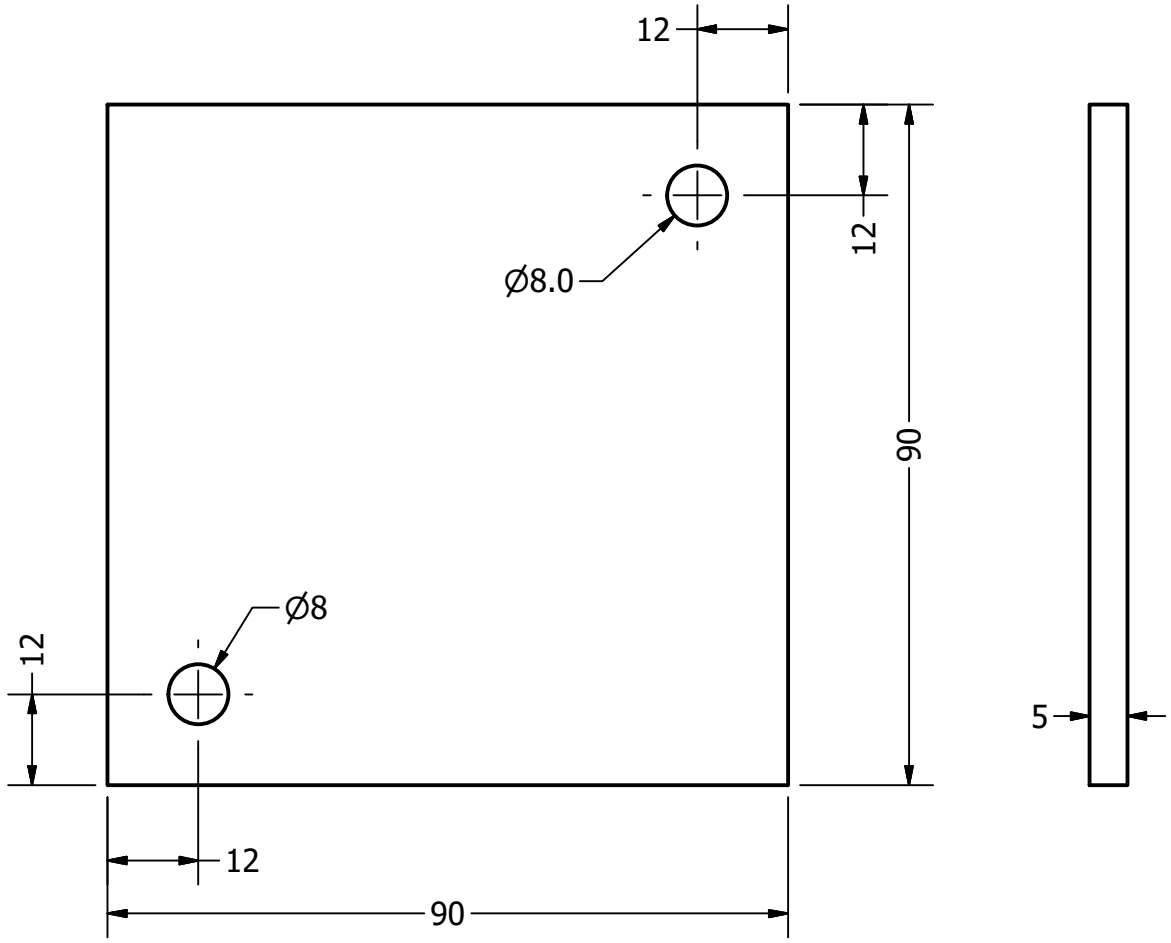

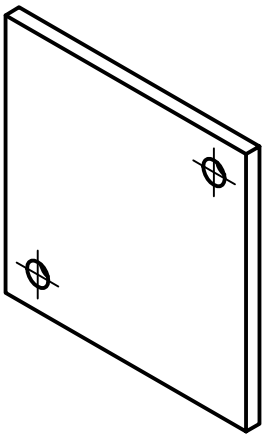

Proyect zigzag solar water heater		Created by D. Mosquera	Approved by D. Jeager		
Part Name rectabgular flancher 90x90x5		Part Code 5.6	Document Type part	Material	
Redesigned by OPEN SOURCE ECOLOGY GERMANY	Original drawing from Practical ACTION	License CERN-OHL	File Name oseg_zswh_rectangular-flancher.ipt	Version 1.0	Quantity 4
			Scale 1 : 1	Sheet 38	Date 10.02.21

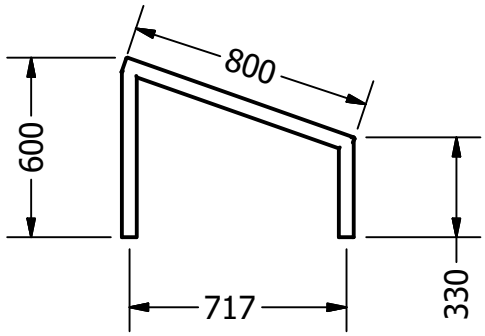

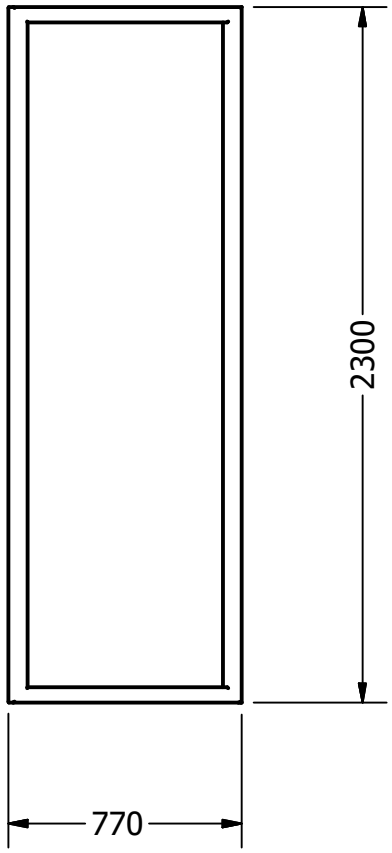

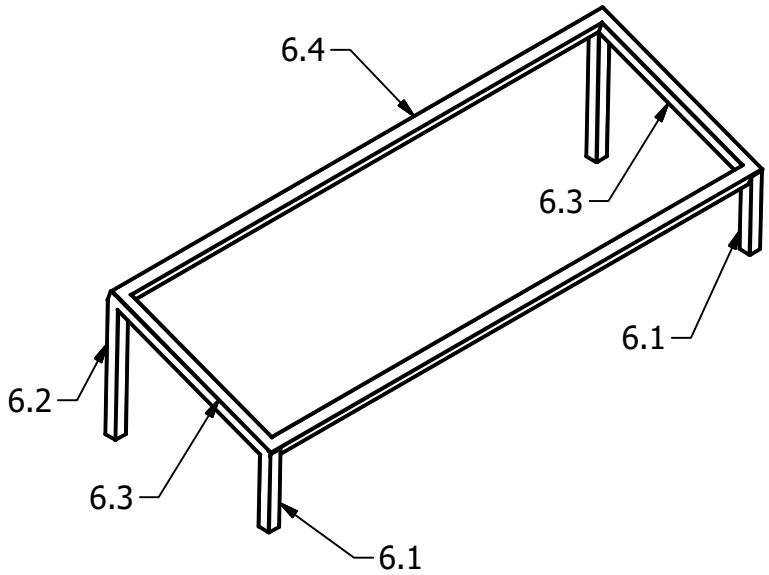

Proyect zigzag solar water heater		Created by D. Mosquera	Approved by D. Jeager		
Part Name foundation storage tank		Part Code 6	Document Type assembly	Material	
Redesigned by OPEN SOURCE ECOLOGY GERMANY	Original drawing from Practical ACTION	License CERN-OHL	File Name oseg_zswh_base-colletor.ipt	Version 1.0	Quantity 1
			Scale 1 / 25	Sheet 39	Date 10.02.21

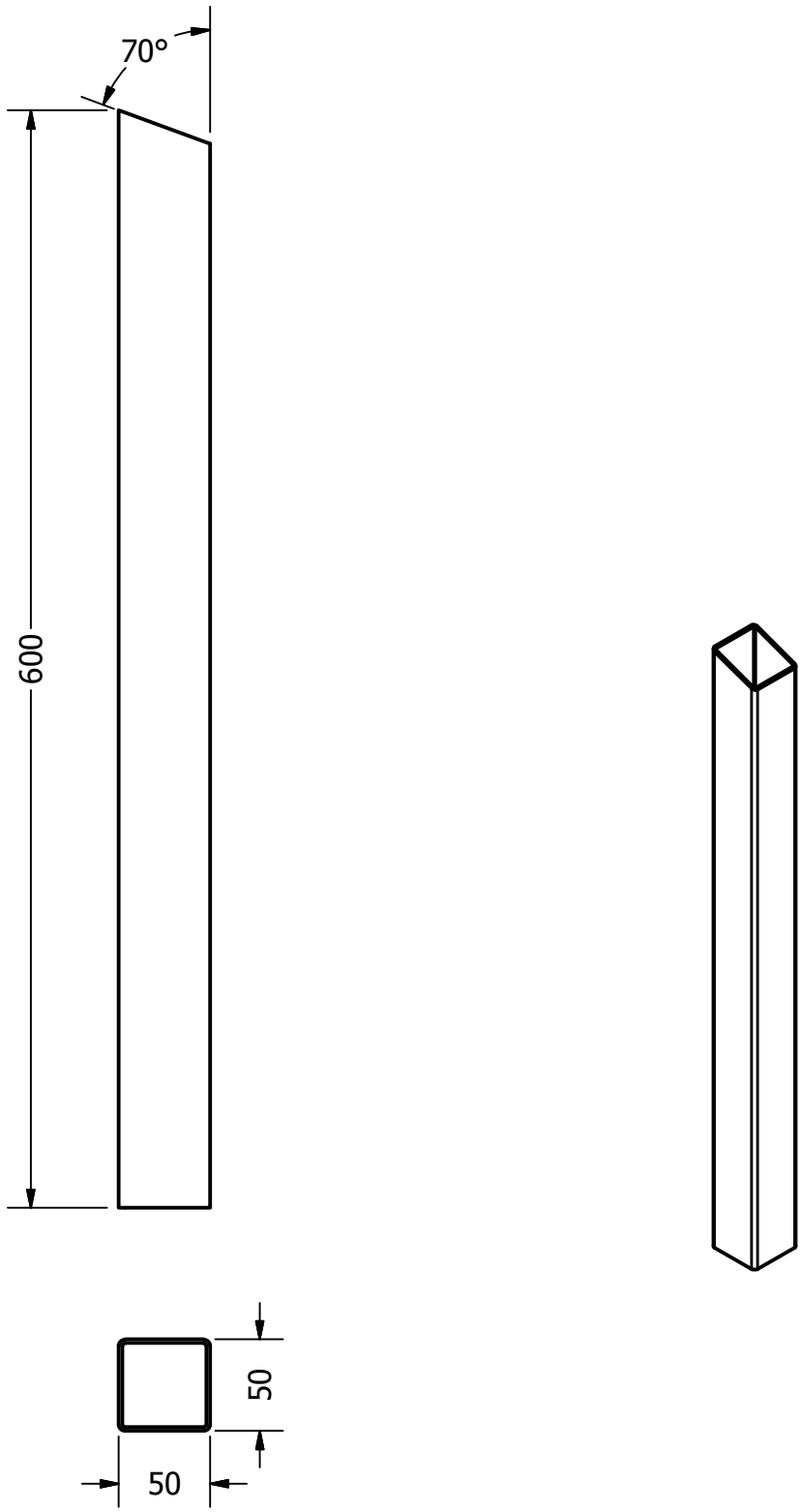

Proyect zigzag solar water heater		Created by D. Mosquera	Approved by D. Jeager		
Part Name steel pipe 50x50x330		Part Code 6.1	Document Type part	Material	
Redesigned by OPEN SOURCE ECOLOGY GERMANY	Original drawing from Practical ACTION	License CERN-OHL	File Name oseg_zswh_steel-pipe 50x50x330.ipt	Version 1.0	Quantity 4
			Scale 1 / 4	Sheet 40	Date 10.02.21

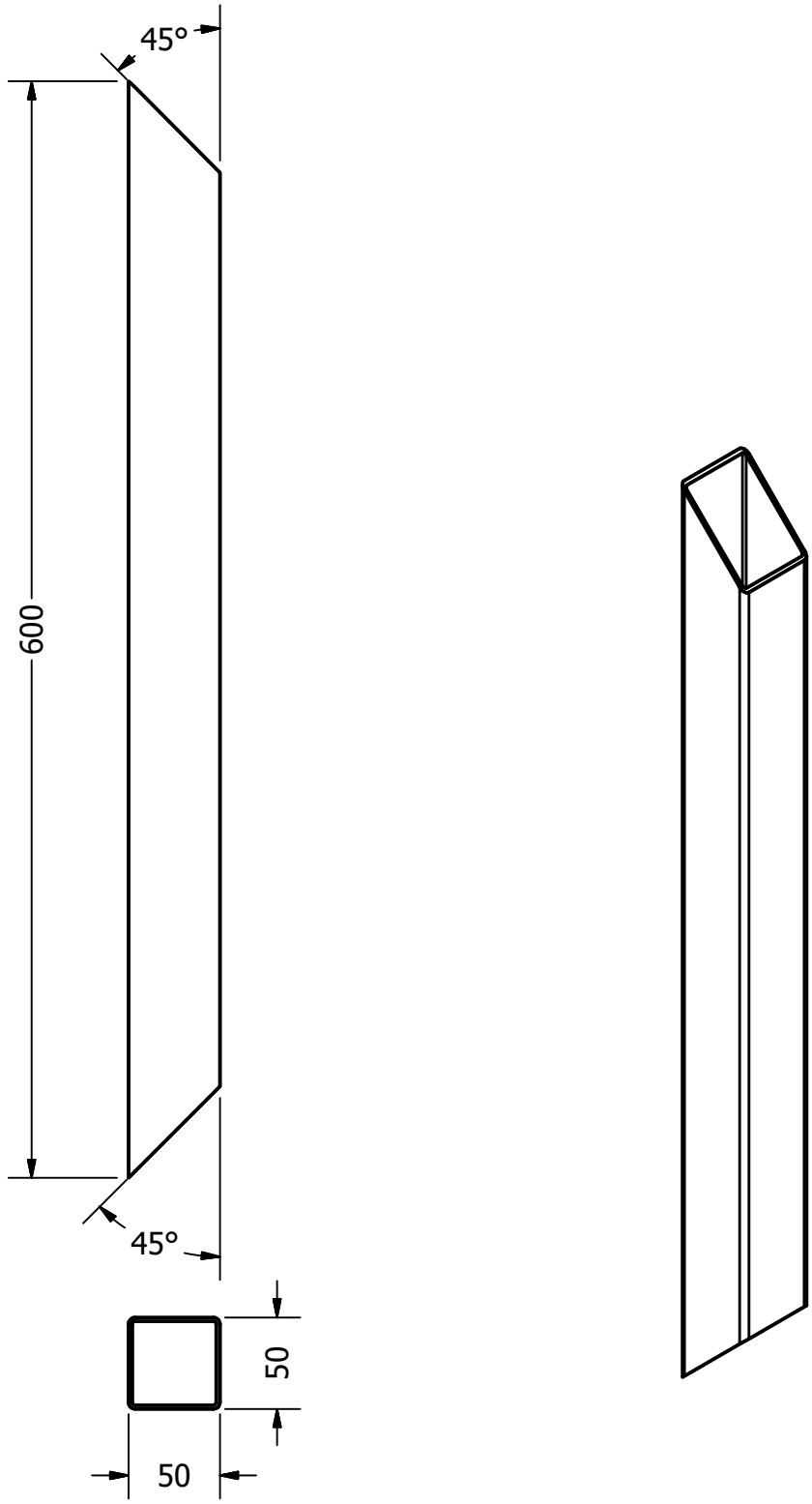

Proyect zigzag solar water heater		Created by D. Mosquera	Approved by D. Jeager		
Part Name steel pipe 50x50x600		Part Code 6.2	Document Type part	Material	
Redesigned by OPEN SOURCE ECOLOGY GERMANY	Original drawing from Practical ACTION	License CERN-OHL	File Name oseg_zswh_steel-pipe 50x50x600.ipt	Version 1.0	Quantity 4
			Scale 1 / 4	Sheet 41	Date 10.02.21

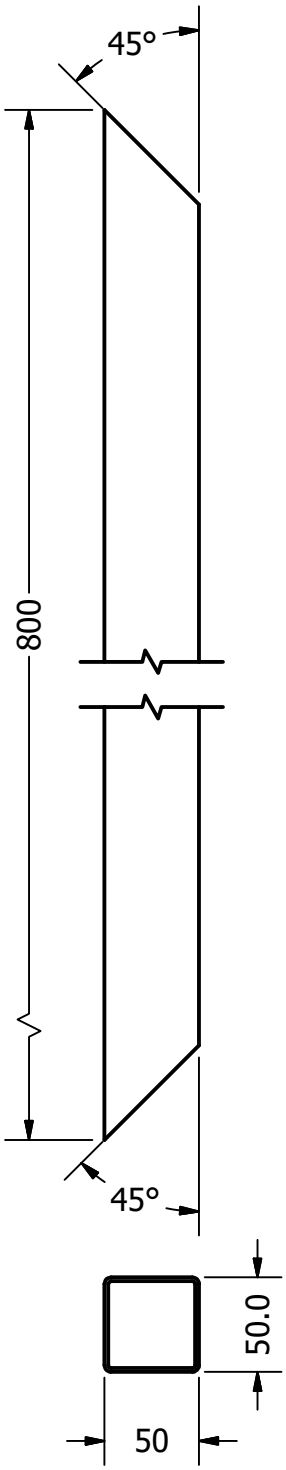

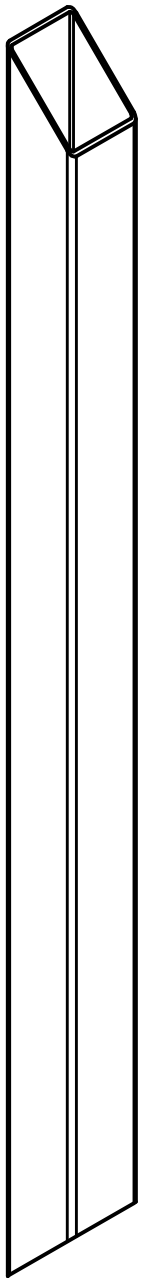

Proyect zigzag solar water heater		Created by D. Mosquera	Approved by D. Jeager		
Part Name steel pipe 50x50x800		Part Code 6.3	Document Type part	Material	
Redesigned by OPEN SOURCE ECOLOGY GERMANY	Original drawing from Practical ACTION	License CERN-OHL	File Name oseg_zswh_steel-pipe 50x50x800.ipt	Version 1.0	Quantity 4
			Scale 1 / 4	Sheet 42	Date 10.02.21

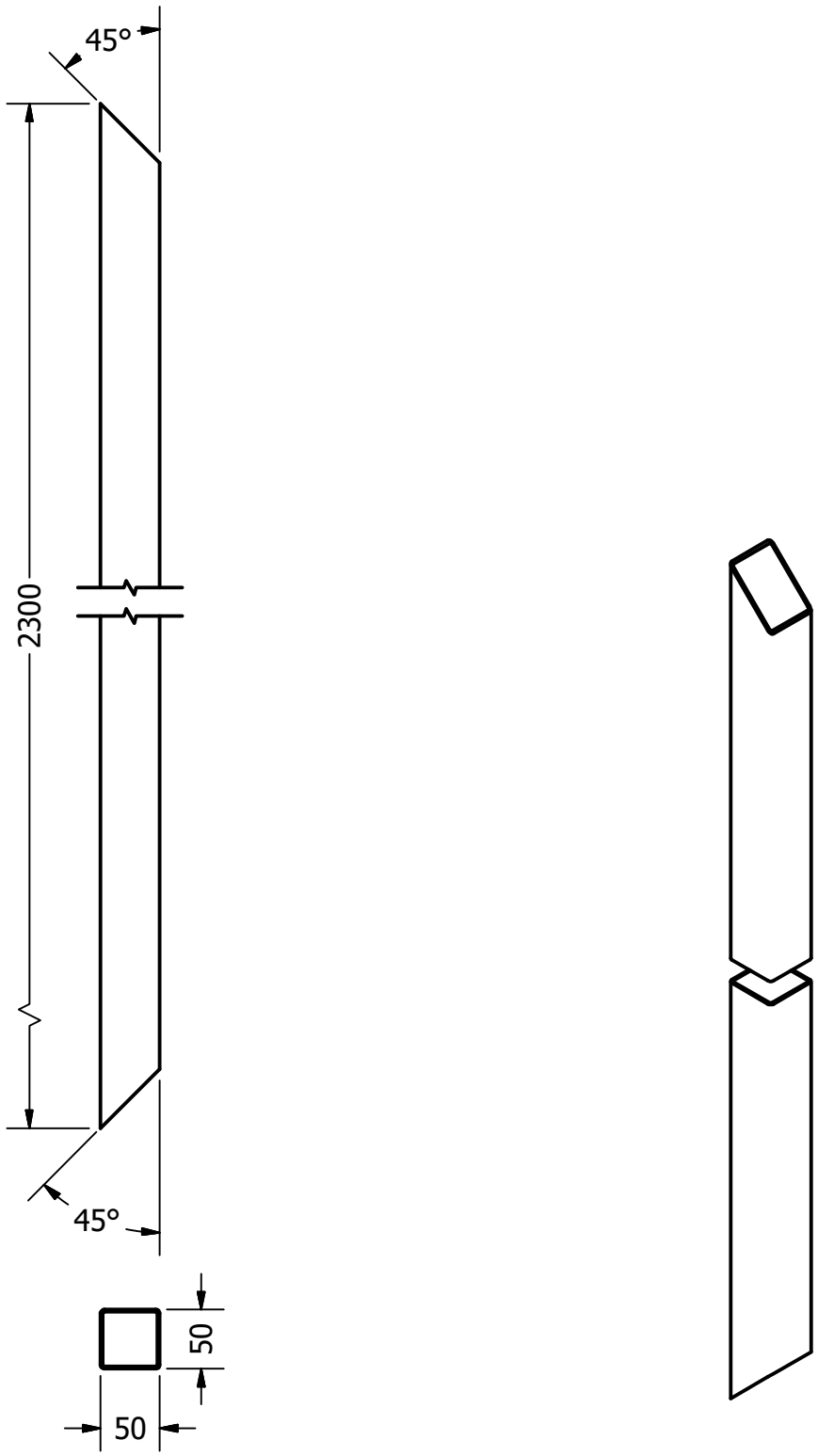

Proyect zigzag solar water heater		Created by D. Mosquera	Approved by D. Jeager		
Part Name steel pipe 50x50x2300		Part Code 6.4	Document Type part	Material	
Redesigned by OPEN SOURCE ECOLOGY GERMANY	Original drawing from Practical ACTION	License CERN-OHL	File Name oseg_zswh_steel-pipe 50x50x2300.ipt	Version 1.0	Quantity 4
			Scale 1 / 6	Sheet 43	Date 10.02.21