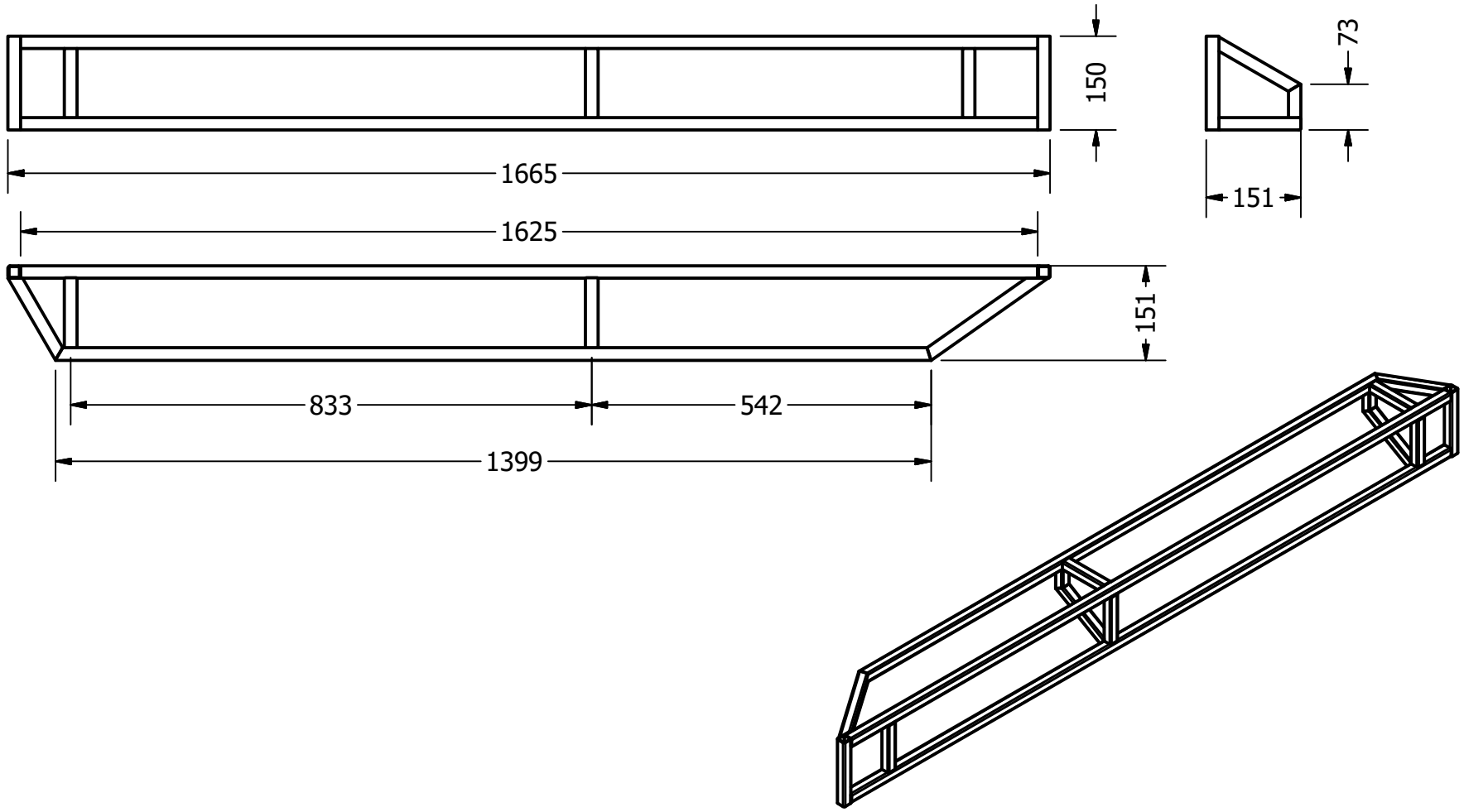

Proyect Crowd bicycle trailer		Created by D. Mosquera	Approved by D. Jeager		
Part Name Left-side-frame		Part Code 1.1	Document Type ASSEMBLY	Material	
Redesigned by OPEN SOURCE ECOLOGY GERMANY	Original drawing from Practical ACTION	License CERN-OHL	File Name oseg_cbt_left-side-frame.iam	Version 1.0	Quantity 1
			Scale 1:10	Sheet 8	Date 04.12.20