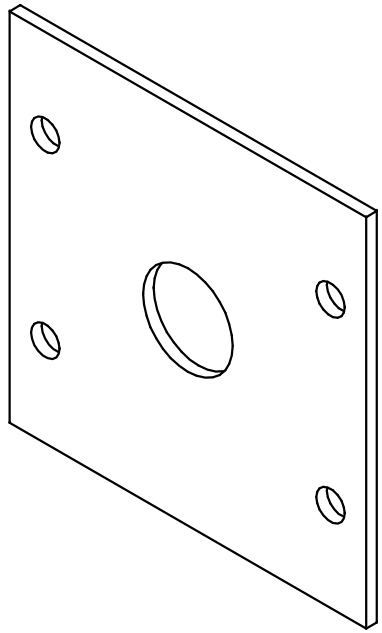

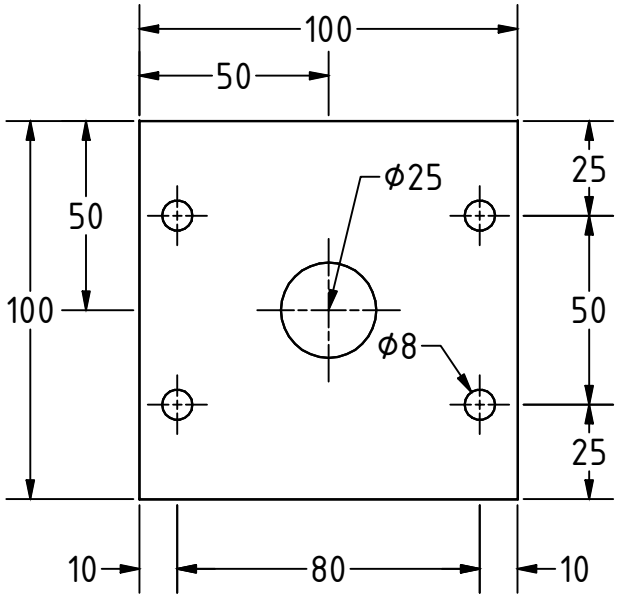

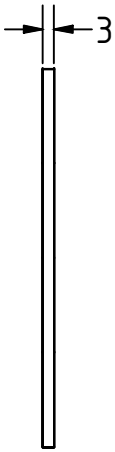

Note: All units in mm.

PROJECT	CREATED BY	APPROVED BY	DATE	VERSION
Groundnut huller	E. Araujo	A. Morillo	06/08/2021	1.0
PART NAME	FILE NAME			POS
Plate	oho_gh_groundnut_huller.dwg			6
DEVELOPED BY	REDESIGNED BY	DOC. TYPE	MATERIAL	QUANTITY
		Part	Steel C45	2
		LICENCE	SCALE	SHEET
Apt	OHO e.V.	CC-BY-SA 4.0	1:2	10/19