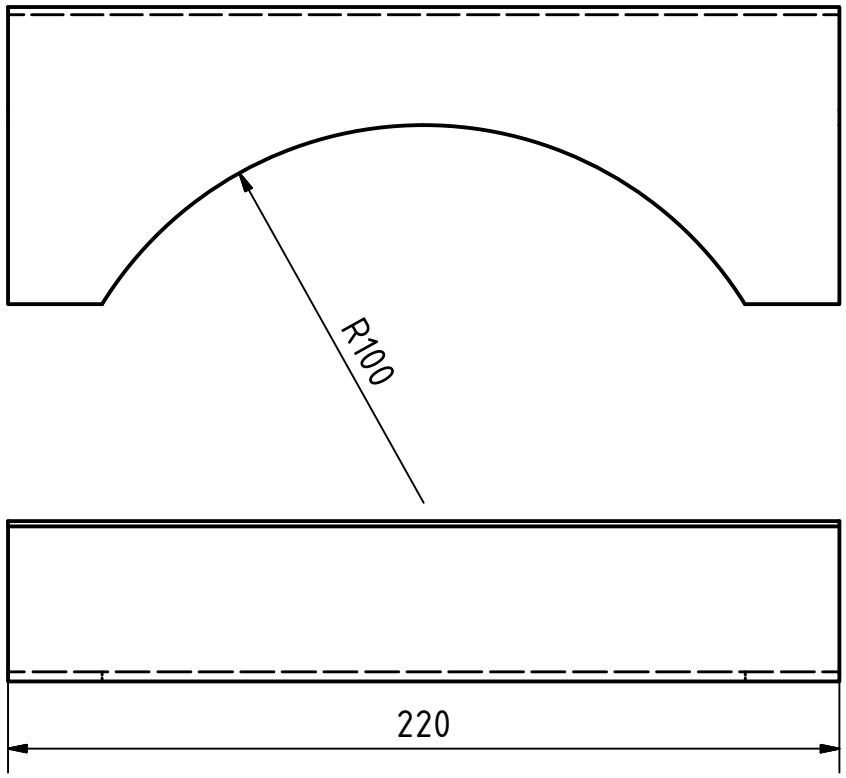


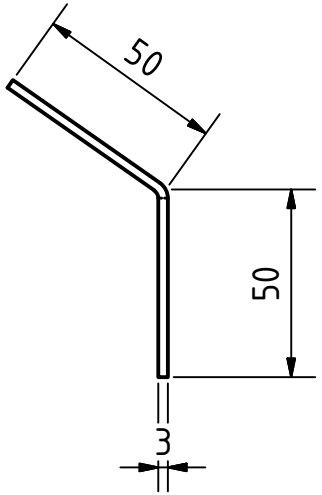


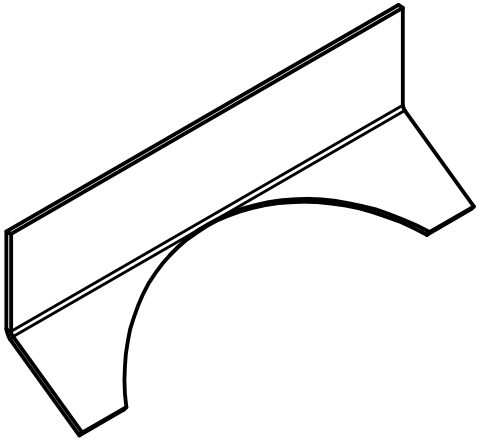

| PROJECT | CREATED BY | APROVED BY | DATE | VERSION |
|---|---|---|---|---|
| PROJECT NAME | D.MOSQUERA | A. MORILLO | 20-05-21 | 1.0 |
| PART NAME | FILE NAME | | | PART CODE |
| Angle 50x50x125 | oseg_hww_Angle 50x50x125.ipt | | | 3.5 |

| DEVELOPED BY | REDESIGNED BY | SUPPORTED BY | DOC. TYPE | MATERIAL | QUANTITY |
|---|---|---|---|---|---|
| UNICEF | OSEG | E.ON STIFTUNG | PART | Steel C45 | 1 |
| | | | LICENCE | SCALE | SHEET |
| | | | CC-BY-SA 4.0 | 1:5 | 25 /38 |