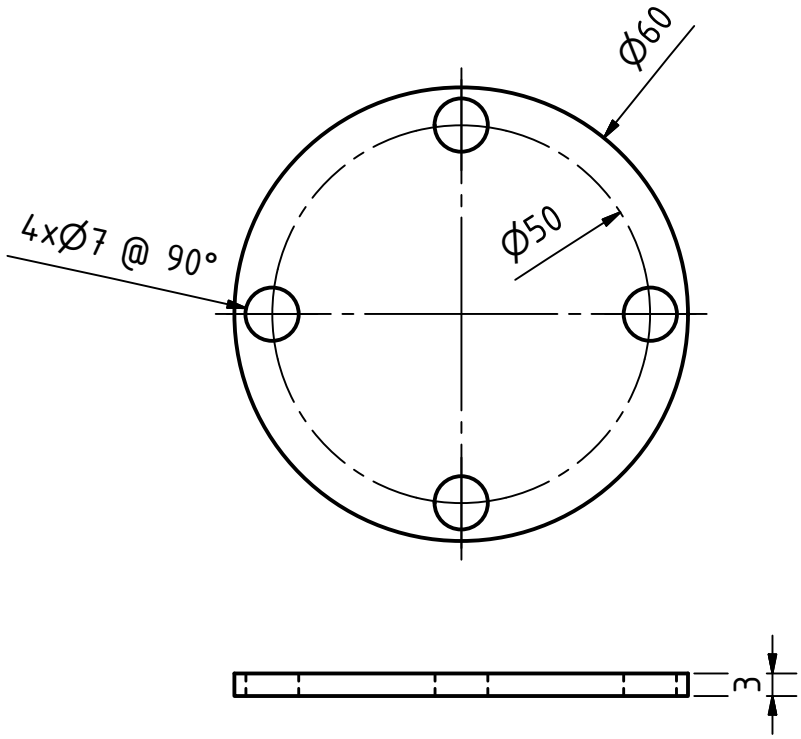

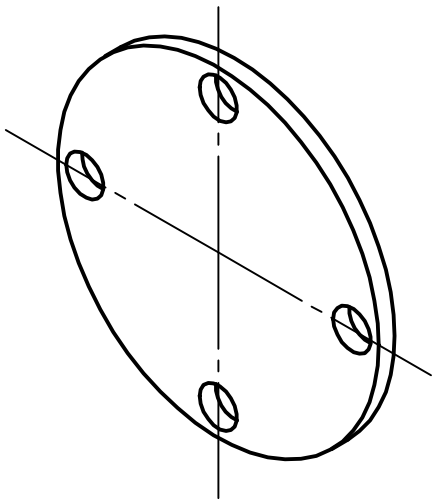

PROJECT	CREATED BY	APROVED BY	DATE	VERSION
Cross Flow Turbine	D.MOSQUERA	D. JAEGER	05-04-21	1.0

PART NAME	FILE NAME	PART CODE
Cover	oseg_cft_cover.ipt	6.1.0

DEVELOPED BY	REDESIGNED BY	SUPPORTED BY	DOC. TYPE	MATERIAL	QUANTITY
skat	OPEN SOURCE ECOLOGY GERMANY OSEG	E.ON STIFTUNG	PART	Steel C45	1

LICENCE	SCALE	SHEET
CC.BY.SA 4.0	1:1	58 /90