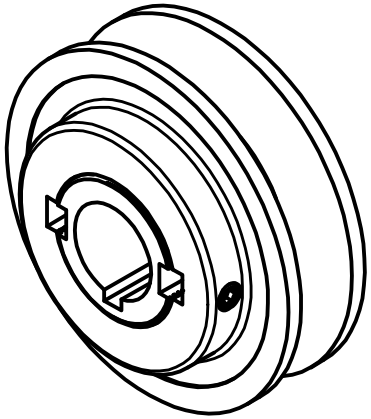

SCALE (1 : 2)

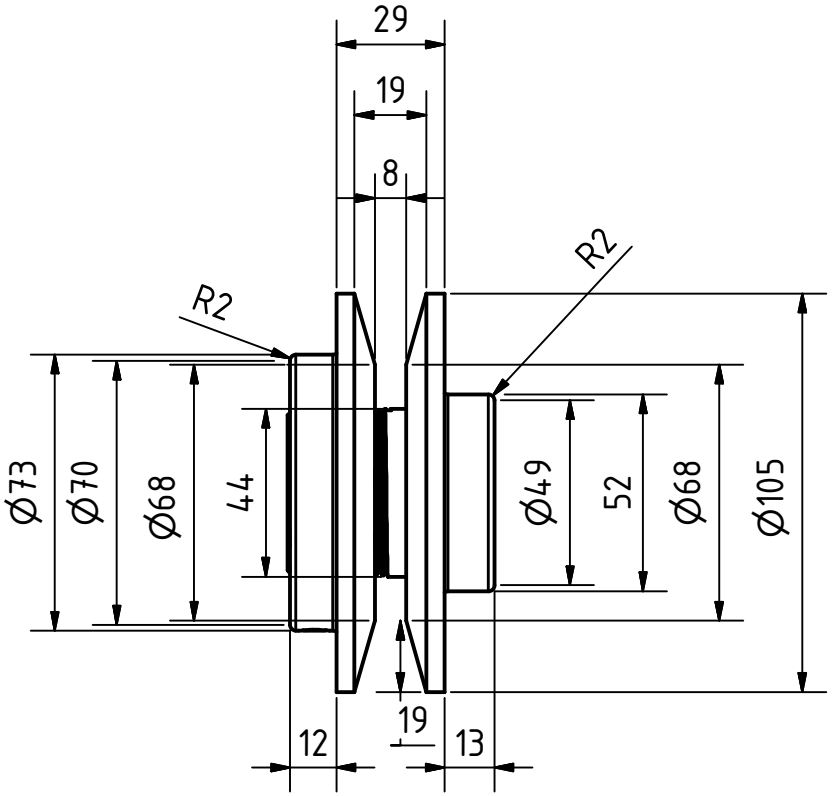

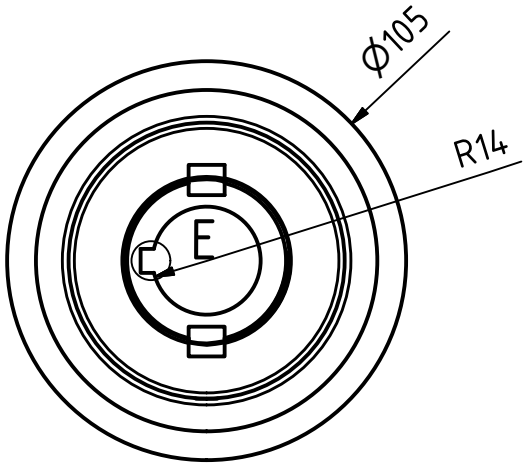

SCALE (1 : 2)

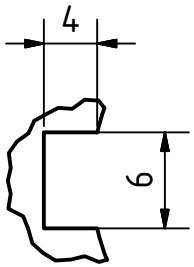

E (2 : 1)

Note: All units in mm.
Note1: Use screws M5 to hold the shaft to the pulley.

PROJECT	CREATED BY	APPROVED BY	DATE	VERSION
Thickness Sander	L. RUDA	A. MORILLO	06/10/2021	1.0
PART NAME	FILE NAME			POS
Pulley 1	Pulley 1.ipt			4.4
PUBLISHED BY	DOC. TYPE	MATERIAL		QUANTITY
	Part	Hardwood		1
OHO e.V.	LICENCE		SCALE	SHEET
	CC-BY-SA 4.0		1:2	17 /22