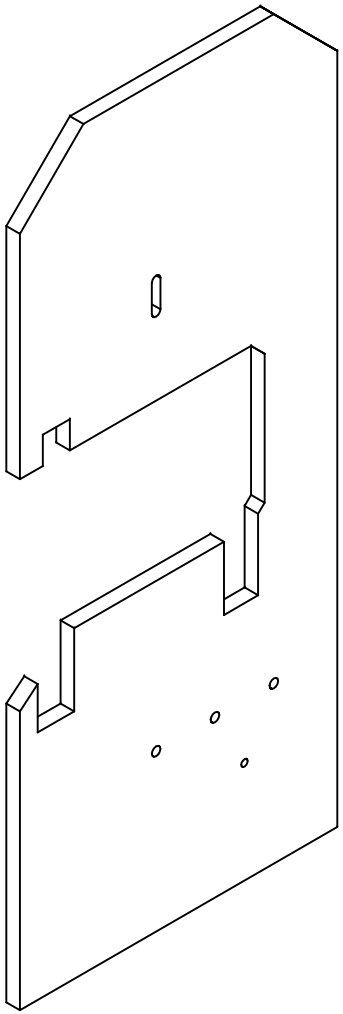

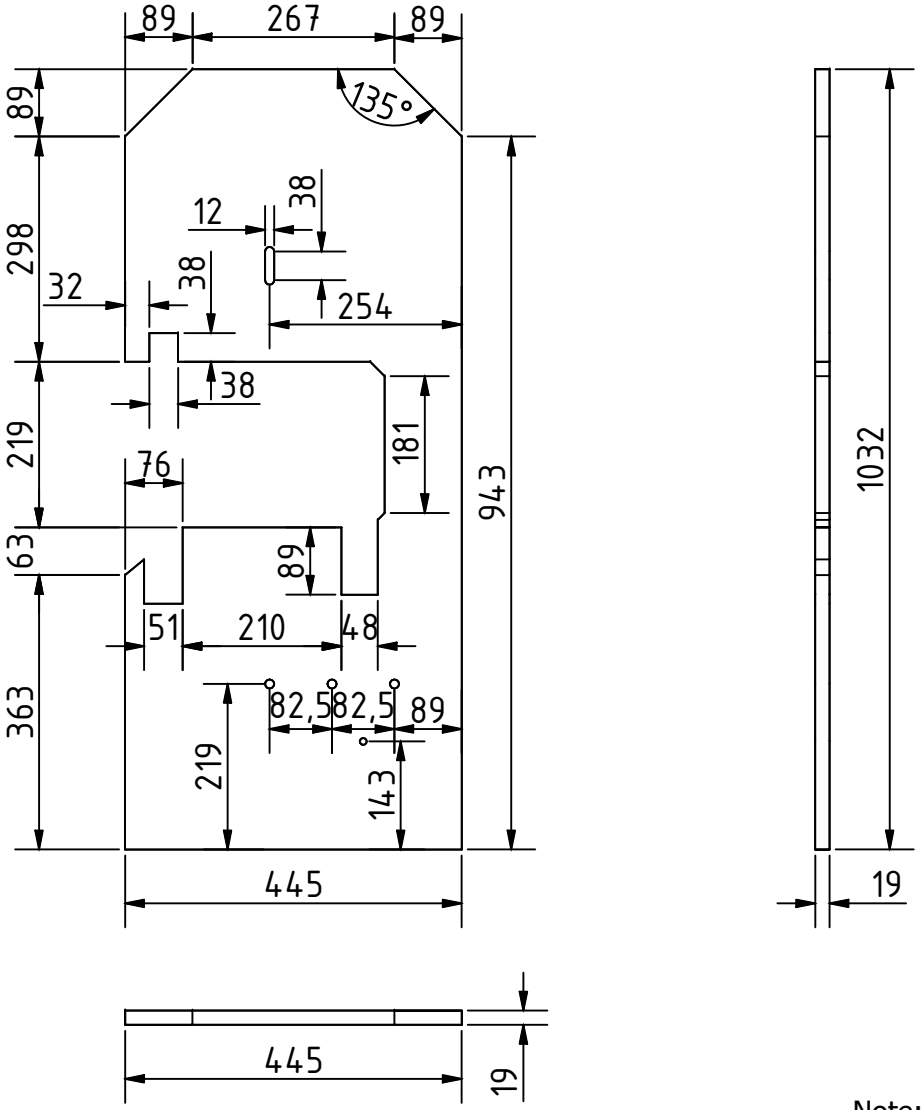

Note: All units in mm.

PROJECT	CREATED BY	APPROVED BY	DATE	VERSION
Bandsaw wheel - Dia 12 inch	E. Araujo	A. Morillo	13/09/2021	1.0
PART NAME	FILE NAME			POS
Front panel	jah_bsw_bandsaw_wheel_-_dia_12_inch.dwg			3.1
PUBLISHED BY	DOC. TYPE	MATERIAL		QUANTITY
OPEN HARDWARE OBSERVATORY Free Blueprints for Sustainable Development	Part	Plywood		1
	LICENCE		SCALE	SHEET
OHO e.V.	CC-BY-SA 4.0		1:10	31/55